SPECIAL RESIDENTIAL TOWNHOUSE DEVELOPMENT PLAN
"PROSPECT HILL VILLAGE"
A MULTI-UNIT RESIDENTIAL DEVELOPMENT
BELLINGHAM, MASSACHUSETTS

Date: November 30, 2023
Revised: April 2, 2024
July 15, 2024; Sept. 26, 2024
January 30, 2025; April 9, 2025: April 28, 2025

APPROVED BY THE
BELLINGHAM PLANNING BOARD:

_____

_____

_____

_____

_____

DATE APPROVED: _____

I TOWN CLERK OF THE TOWN OF BELLINGHAM RECEIVED AND RECORDED FROM THE PLANNING BOARD APPROVAL OF THIS PLAN AND NO APPEAL HAS BEEN TAKEN FOR TWENTY DAYS NEXT AFTER RECEIPT AND RECORDING OF SAME.

_____ TOWN CLERK _____ DATE

PLAN REFERENCE:
NORFOLK COUNTY REGISTRY OF DEEDS
FILE AS PAGE 80, PL.BK. 706
FILE AS PAGE 81, PL.BK. 706
FILE AS PAGE 30, PL.BK. 713
PLAN No.712 OF 1985
PLAN No.425 OF 1960
PLAN BOOK 323 (No.712 OF 1985)
PLAN BOOK 388 (No.1176 OF 1989)
PLAN BOOK 234 (No.976 OF 1972)
PLAN BOOK 231 (No.392 OF 1972)
RECORD BOOK 861, PAGE 506

ASSESSOR'S REFERENCE:
FRANKLIN:
MAP 309, LOT 018
MAP 308, LOT 079
BELLINGHAM:
MAP 69, LOT 87
MAP 65, LOT 22
MAP 65, LOT 20

ZONING CLASSIFICATIONS:
WATER RESOURCE DISTRICT
AGRICULTURAL
LOT AREA:
Single Family: 80,000 s.f
Two Family: 160,000 s.f.
FRONTAGE: 200'
SETBACKS:
Front: 30'
SIDE: 15'
REAR: 20'

IMPERVIOUS LOT COVERAGES:

BUILDINGS:	185,980 S.F.	(6.0%)
ROADS/WALKS/DRIVES:	291,582 S.F.	(9.3%)
TOTAL IMPERVIOUS:	477,562 S.F.	(15.3%)

LAND AREA:

PARCEL	AREA(s.f.)	AREA(Franklin)(s.f.)
Parcel 1A-R	1,340,906	102,514
Lot 7	1,445,804	68,095
Parcel 3A	41,836	8,166
Parcel 1	297,228	0
Parcel 2	167,808	0
Parcel	23,957	13,967
TOTAL	3,317,539	192,742

Total Land Bellingham: 3,124,797 (71.7±AC)

ZONING SECTION 240-101 TOWNHOUSE DWELLINGS:

	REQUIRED	PROVIDED
MIN LOT AREA:	20 AC.	71.7 AC.

UNITS ALLOWED: 10,000 s.f./Bedroom
3,124,797 s.f./10,000 = 312 Bedrooms
2-Bedroom Units: 312 / 2 = 156 Units

Proposed 129 Units (43 Buildings)

PARKING SCHEDULE FOR COMMUNITY RECREATION BUILDING:
Section 240-59.E.(6) Recreation Community Center
Parking Required: 3 Spaces per 1000 sf of GFA
Proposed: 2800 s.f Building
Parking Required:
9 Spaces
Parking Provided:
11 Spaces

NOTES:
1. THIS PLAN IS THE RESULT OF AN ON-THE-GROUND SURVEY CONDUCTED BY GLM ENGINEERING CONSULTANTS, INC.. THE UTILITY LOCATIONS DEPICTED ON THIS PLAN ARE BASED ON FIELD OBSERVATIONS MADE BY GLM ENGINEERING CONSULTANTS, INC., DIGSAFE PAINT-INDICATORS AND/OR RECORD PLAN LOCATIONS. GLM ENGINEERING CONSULTANTS, INC., DOES NOT WARRANT THAT ALL UTILITIES ARE SHOWN OR THAT UTILITIES THAT ARE DEPICTED ARE SHOWN IN THE CORRECT LOCATION OR WITH THE PROPER MATERIAL DESIGNATION. GLM ENGINEERING CONSULTANTS, INC. DOES NOT WARRANT OR PROVIDE AN EXPRESS OR IMPLIED WARRANTY THAT ALL SUBSURFACE IMPROVEMENTS ARE SHOWN CORRECTLY, INCLUDING BUT NOT LIMITED TO UTILITIES, UNDERGROUND VAULTS, TANKS OR CHAMBERS, DUCT BANKS AND/OR OTHER MAN-MADE UNDERGROUND IMPROVEMENTS. GLM ENGINEERING CONSULTANTS, INC. DOES NOT WARRANT THE LOCATION NOR CHARACTER OR SURFACE IMPROVEMENTS, THE OBSERVATION OF WHICH WAS OBSCURED AT THE TIME OF THE SURVEY.
2. THE PROPERTY DESCRIBED ON THIS SURVEY LIES WITHIN ZONE 'X' AND ZONE 'A' A SPECIAL FLOOD HAZARD AREA AS DEFINED BY THE FEDERAL EMERGENCY MANAGEMENT AGENCY. THE PROPERTY IS IDENTIFIED AS MAP NUMBER 25021C0304E, EFFECTIVE DATE 07/17/2012. FLOOD ZONE 'A' IS LOCATED WITHIN THE BOREDERING VEGETATED WELTAND AREA.

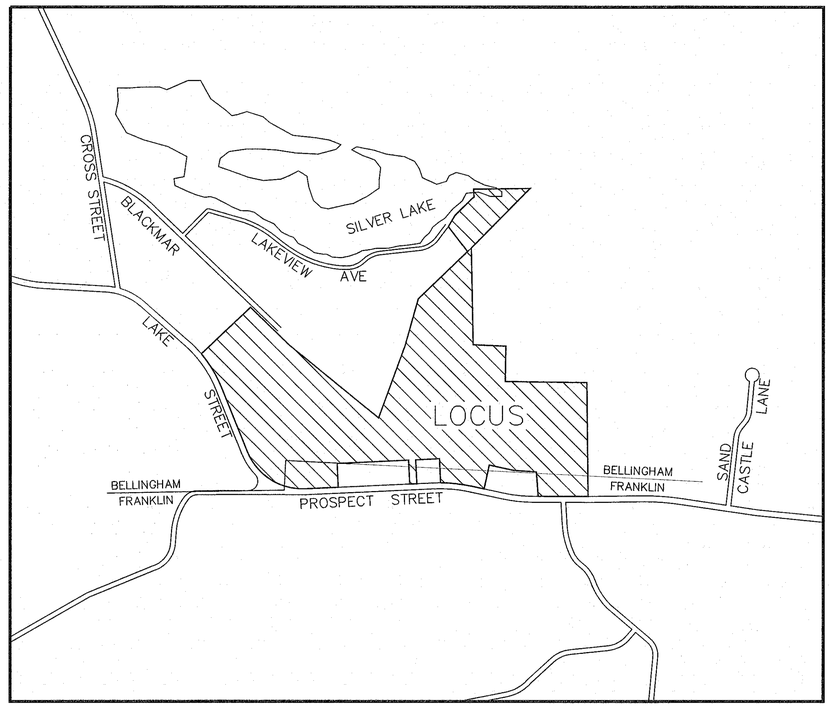

LOCUS MAP
1"=800'

COMMONWEALTH OF MASSACHUSETTS
JOYCE E. HASTINGS
No. 39093
REGISTERED PROFESSIONAL LAND SURVEYOR
4/28/25

COMMONWEALTH OF MASSACHUSETTS
ROBERT S. TRUAX
CIVIL
NO. 56567
REGISTERED PROFESSIONAL ENGINEER
4/28/25

PHASING:

PHASE I
Units: 1-39
Roadway A (0+00 - 9+00)
Roadway B (Full length)

PHASE II
Units: 41-66 & 97-120
Roadway C (0+00 - 22+50)

PHASE III
Units: 67-96 & 121-129
Roadway C
Emergency Access Road

SHEET INDEX

PREPARED BY:
GLM ENGINEERING CONSULTANTS, INC.
19 EXCHANGE STREET
HOLLISTON, MASSACHUSETTS 01746
(508)429-1100 fax:(508)429-7160

OWNER & APPLICANT:
WALL STREET DEVELOPMENT CORP.
P.O. BOX 272
WESTWOOD, MASSACHUSETTS

JOB No.	16,660
DATE:	NOV. 30, 2023
SCALE:	As shown
SHEET:	1 of 43
PLAN #:	27,871

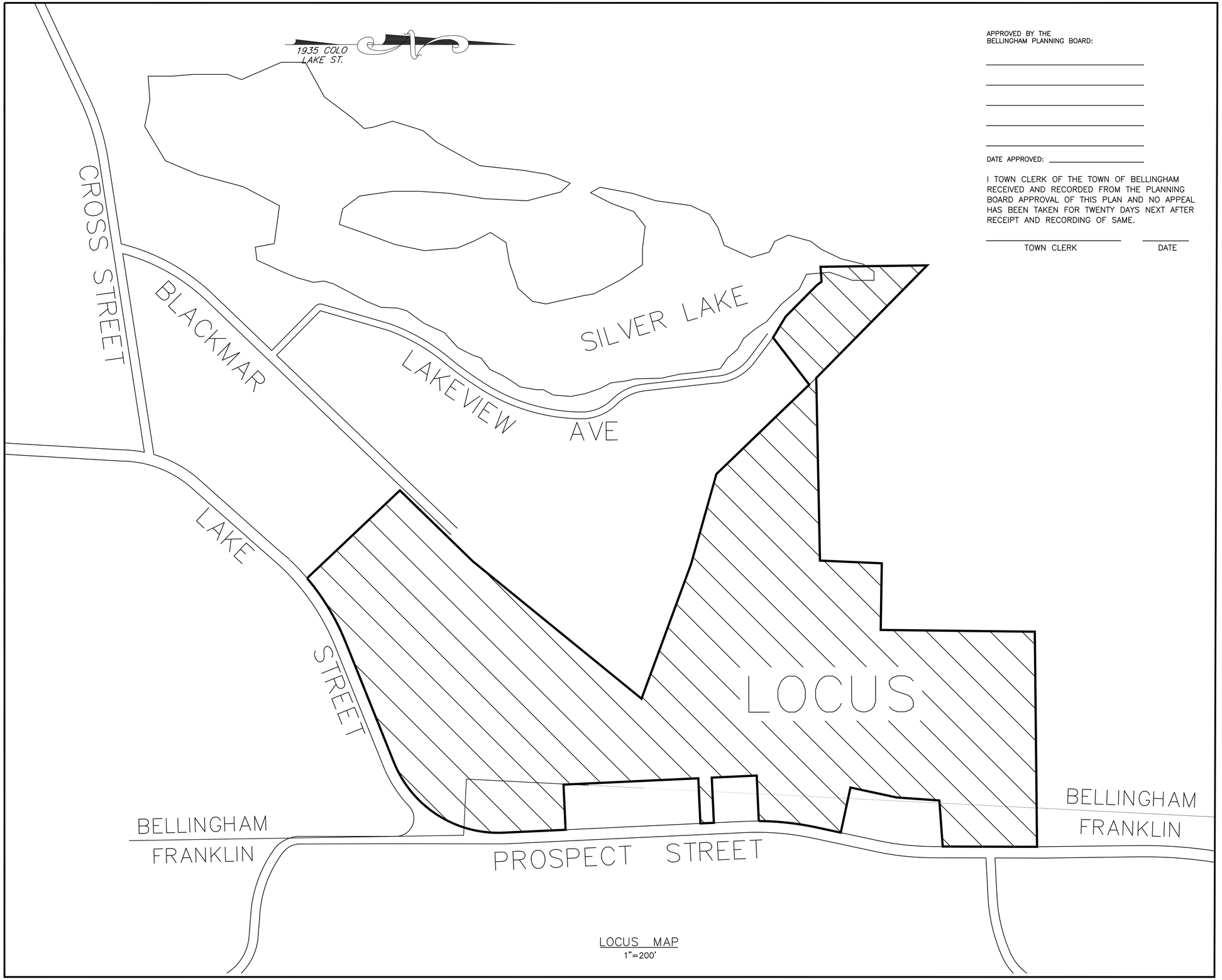

LOCUS MAP
1"=200'

APPROVED BY THE
BELLINGHAM PLANNING BOARD:

_____

_____

_____

_____

_____

DATE APPROVED: _____

I TOWN CLERK OF THE TOWN OF BELLINGHAM RECEIVED AND RECORDED FROM THE PLANNING BOARD APPROVAL OF THIS PLAN AND NO APPEAL HAS BEEN TAKEN FOR TWENTY DAYS NEXT AFTER RECEIPT AND RECORDING OF SAME.

_____ _____
TOWN CLERK DATE

REVISIONS

No.	DATE	DESCRIPTION
1	04/02/2024	WETLAND DELINEATION
2	07/15/2024	PLG BRD ENG COMMENTS
3	09/26/2024	NEW ROAD LAYOUT (LAKE ST)
4	01/30/2025	PLG BRD COMMENTS/129 UNITS
5	04/09/2025	PLG BRD COMMENTS - BSC 3/19/25
6	04/28/2025	PLG BRD COMMENTS

SITE DEVELOPMENT PLAN
"PROSPECT HILL VILLAGE"
A MULTI-UNIT RESIDENTIAL DEVELOPMENT
BELLINGHAM, MASSACHUSETTS

PREPARED FOR:
WALL STREET DEVELOPMENT CORP.
P.O. BOX 272
WESTWOOD, MASSACHUSETTS

GLM Engineering Consultants, Inc.
19 EXCHANGE STREET
HOLLISTON, MA 01746
P: 508-429-1100
F: 508-429-7160
www.GLMengineering.com

JOB No.	16,590
DATE:	NOV. 30, 2023
SCALE:	1"=200'
SHEET:	1A of 43
PLAN #:	27,871

LOCUS SHEET

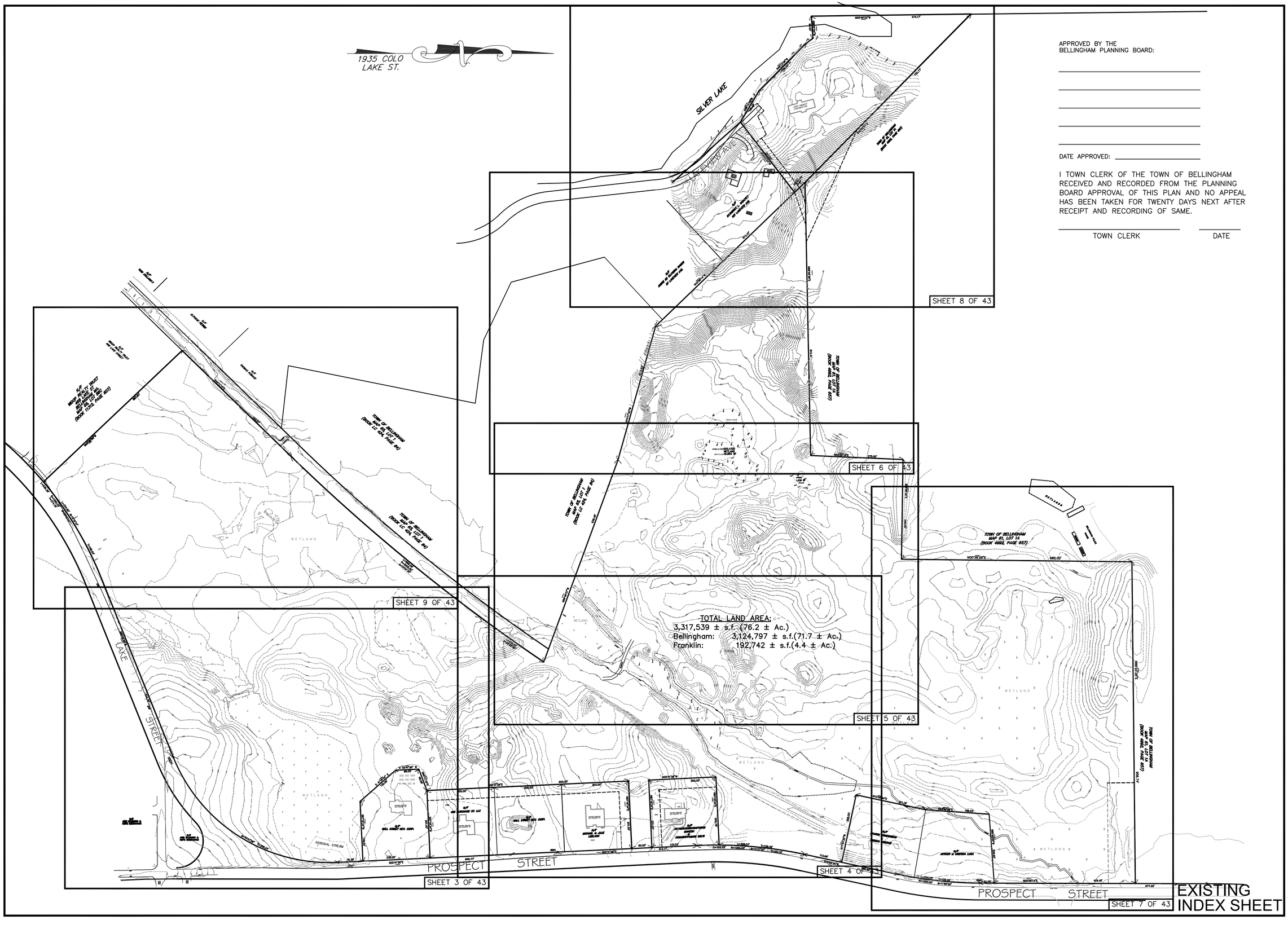

APPROVED BY THE
BELLINGHAM PLANNING BOARD:

DATE APPROVED: _____

I TOWN CLERK OF THE TOWN OF BELLINGHAM RECEIVED AND RECORDED FROM THE PLANNING BOARD APPROVAL OF THIS PLAN AND NO APPEAL HAS BEEN TAKEN FOR TWENTY DAYS NEXT AFTER RECEIPT AND RECORDING OF SAME.

TOWN CLERK _____ DATE _____

REVISIONS

No.	DATE	DESCRIPTION
1	04/02/2024	WETLAND DELINEATION
2	07/15/2024	PLG BRD ENG COMMENTS
3	09/26/2024	NEW ROAD LAYOUT (LAKE ST)
4	01/30/2025	PLG BRD COMMENTS/129 UNITS
5	04/09/2025	PLG BRD COMMENTS - BSC 3/19/25
6	04/28/2025	PLG BRD COMMENTS

SITE DEVELOPMENT PLAN "PROSPECT HILL VILLAGE" A MULTI-UNIT RESIDENTIAL DEVELOPMENT BELLINGHAM, MASSACHUSETTS

PREPARED FOR:
WALL STREET DEVELOPMENT CORP.
P.O. BOX 272
WESTWOOD, MASSACHUSETTS

GLM Engineering Consultants, Inc.
19 EXCHANGE STREET
HOLLISTON, MA 01746
P: 508-429-1100
F: 508-429-7160
www.GLMengineering.com

JOB No.	16,590
DATE:	NOV. 30, 2023
SCALE:	1"=120'
SHEET:	2 of 43
PLAN #:	27,871

EXISTING INDEX SHEET

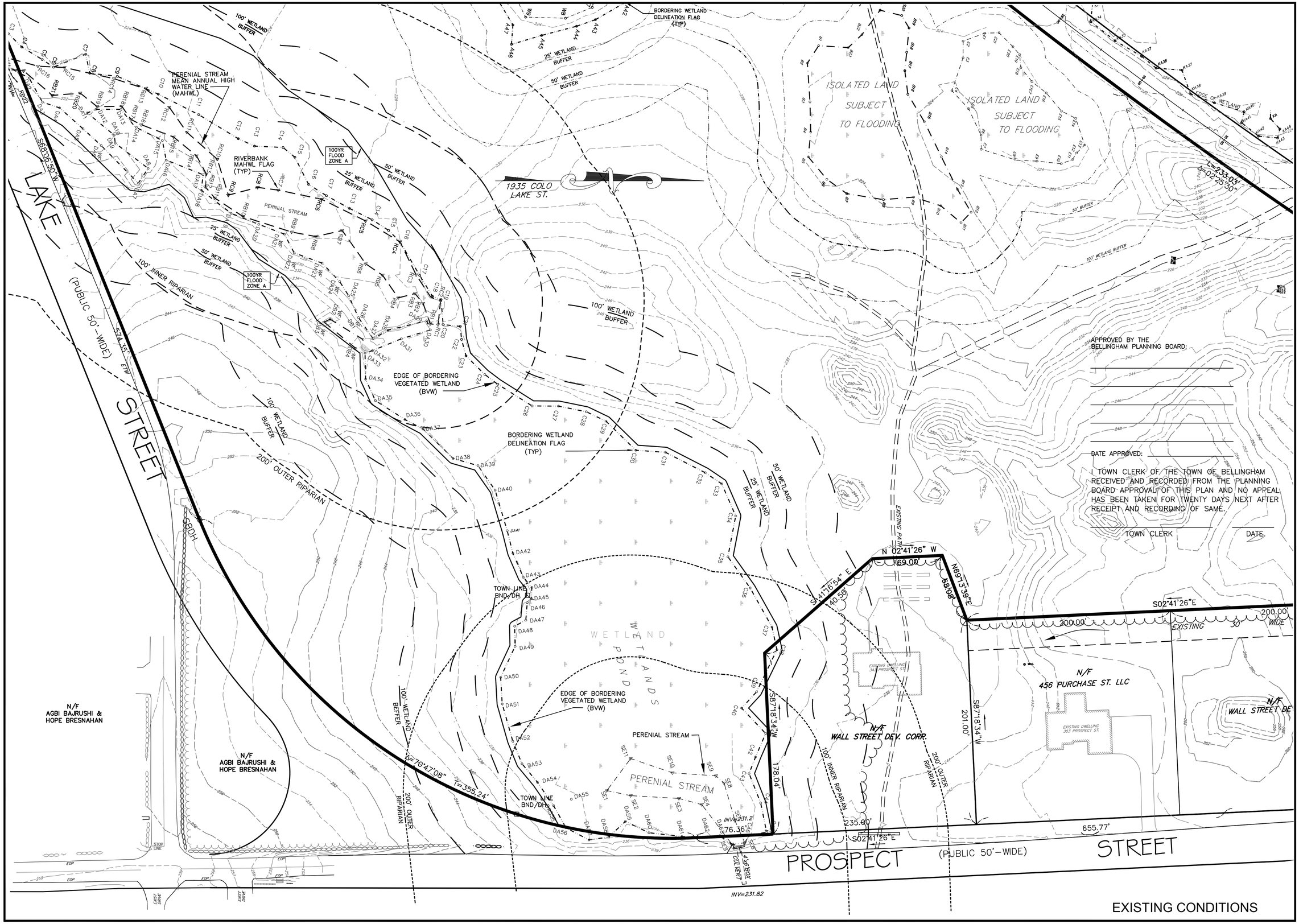

EXISTING CONDITIONS

REVISIONS		
No.	DATE	DESCRIPTION
1	04/02/2024	WETLAND DELINEATION
2	07/15/2024	PLG BRD ENG COMMENTS
3	09/26/2024	NEW ROAD LAYOUT (LAKE ST)
4	01/30/2025	PLG BRD COMMENTS/129 UNITS
5	04/09/2025	PLG BRD COMMENTS - BSC 3/19/25
6	04/28/2025	PLG BRD COMMENTS

SITE DEVELOPMENT PLAN
"PROSPECT HILL VILLAGE"
A MULTI-UNIT RESIDENTIAL DEVELOPMENT
BELLINGHAM, MASSACHUSETTS

PREPARED FOR:
WALL STREET DEVELOPMENT CORP.
P.O. BOX 272
WESTWOOD, MASSACHUSETTS

GLM Engineering Consultants, Inc.
19 EXCHANGE STREET
HOLLISTON, MA 01746
P: 508-429-1100
F: 508-429-7160
www.GLMengineering.com

JOB No.	16,590
DATE:	NOV. 30, 2023
SCALE:	1"=40'
SHEET:	3 of 43
PLAN #:	27,871

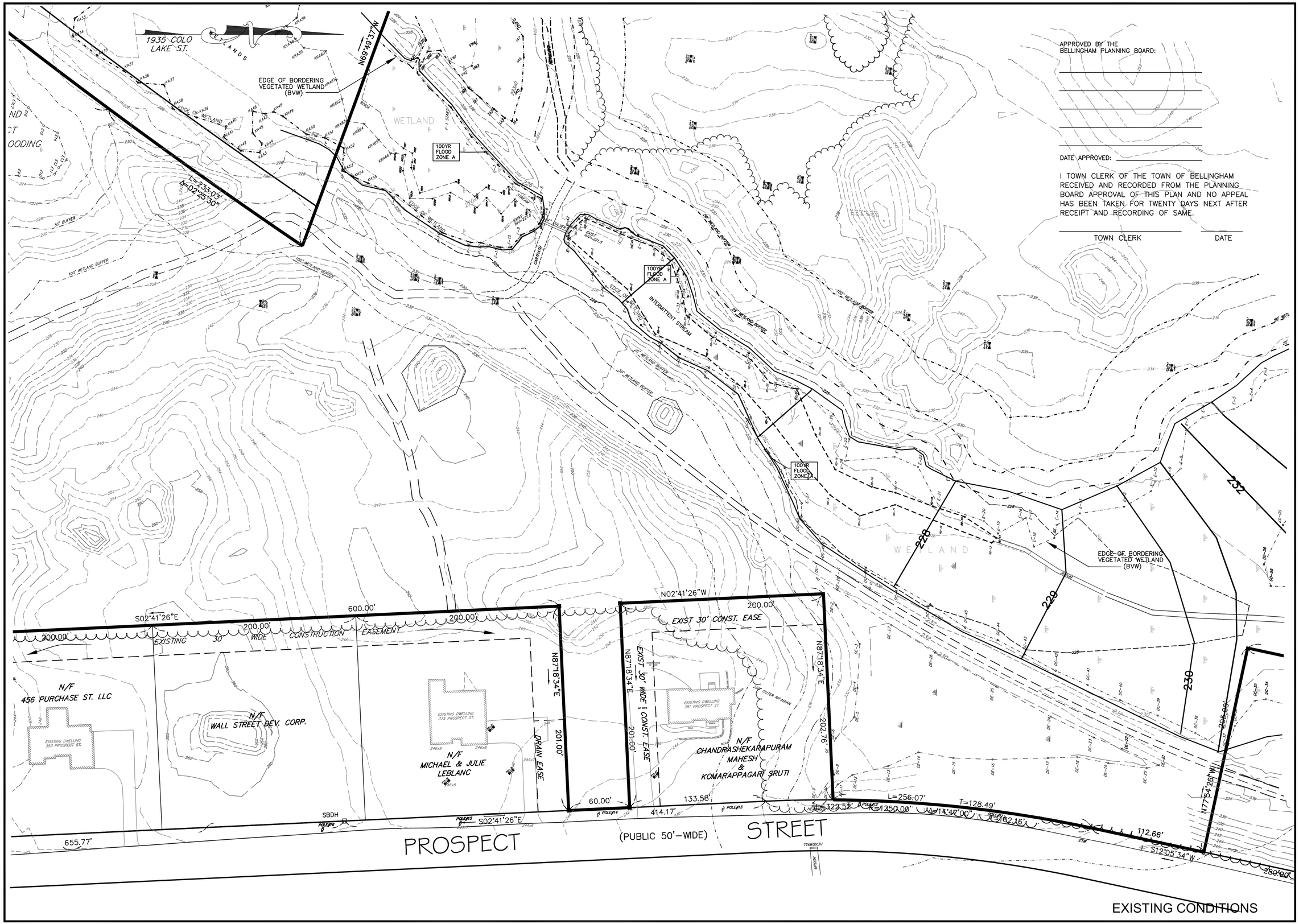

EXISTING CONDITIONS

REVISIONS

No.	DATE	DESCRIPTION
1	04/02/2024	WETLAND DELINEATION
2	07/15/2024	PLG BRD ENG COMMENTS
3	09/26/2024	NEW ROAD LAYOUT (LAKE ST)
4	01/30/2025	PLG BRD COMMENTS/129 UNITS
5	04/09/2025	PLG BRD COMMENTS - BSC 3/19/25
6	04/28/2025	PLG BRD COMMENTS

SITE DEVELOPMENT PLAN "PROSPECT HILL VILLAGE" A MULTI-UNIT RESIDENTIAL DEVELOPMENT BELLINGHAM, MASSACHUSETTS

PREPARED FOR:
WALL STREET DEVELOPMENT CORP.
P.O. BOX 272
WESTWOOD, MASSACHUSETTS

GLM Engineering Consultants, Inc.
19 EXCHANGE STREET
HOLLISTON, MA 01746
P: 508-429-1100
F: 508-429-7160
www.GLMengineering.com

JOB No.	16,590
DATE:	NOV. 30, 2023
SCALE:	1"=40'
SHEET:	4 of 43
PLAN #:	27,871

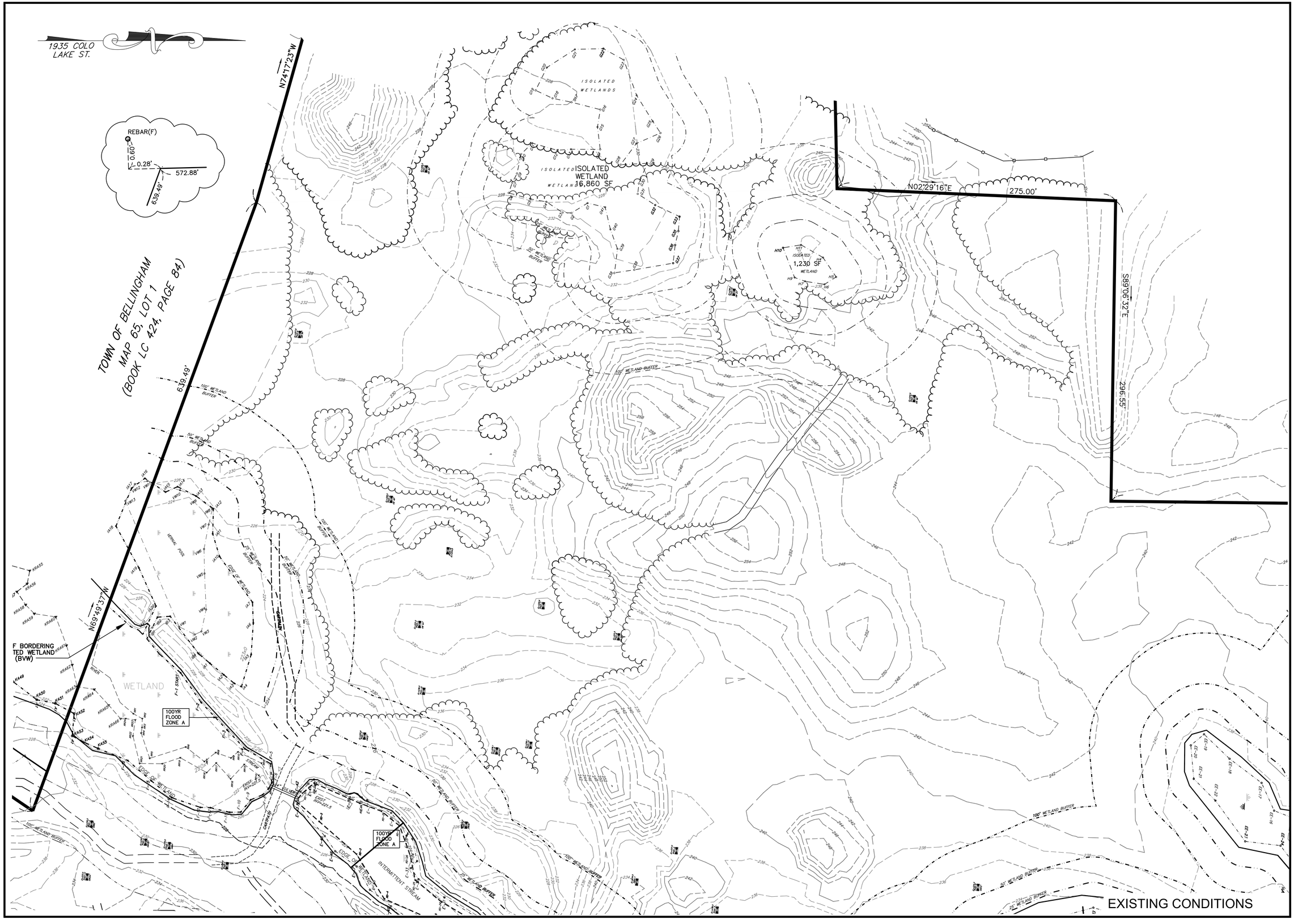

REVISIONS

No.	DATE	DESCRIPTION
1	04/02/2024	WETLAND DELINEATION
2	07/15/2024	PLG BRD ENG COMMENTS
3	09/26/2024	NEW ROAD LAYOUT (LAKE ST)
4	01/30/2025	PLG BRD COMMENTS/129 UNITS
5	04/09/2025	PLG BRD COMMENTS - BSC 3/19/25
6	04/28/2025	PLG BRD COMMENTS

SITE DEVELOPMENT PLAN
"PROSPECT HILL VILLAGE"
A MULTI-UNIT RESIDENTIAL DEVELOPMENT
BELLINGHAM, MASSACHUSETTS

PREPARED FOR:
WALL STREET DEVELOPMENT CORP.
P.O. BOX 272
WESTWOOD, MASSACHUSETTS

GLM Engineering Consultants, Inc.
19 EXCHANGE STREET
HOLLISTON, MA 01746
P: 508-429-1100
F: 508-429-7160
www.GLMengineering.com

JOB No.	16,590
DATE:	NOV. 30, 2023
SCALE:	1"=40'
SHEET:	5 of 43
PLAN #:	27,871

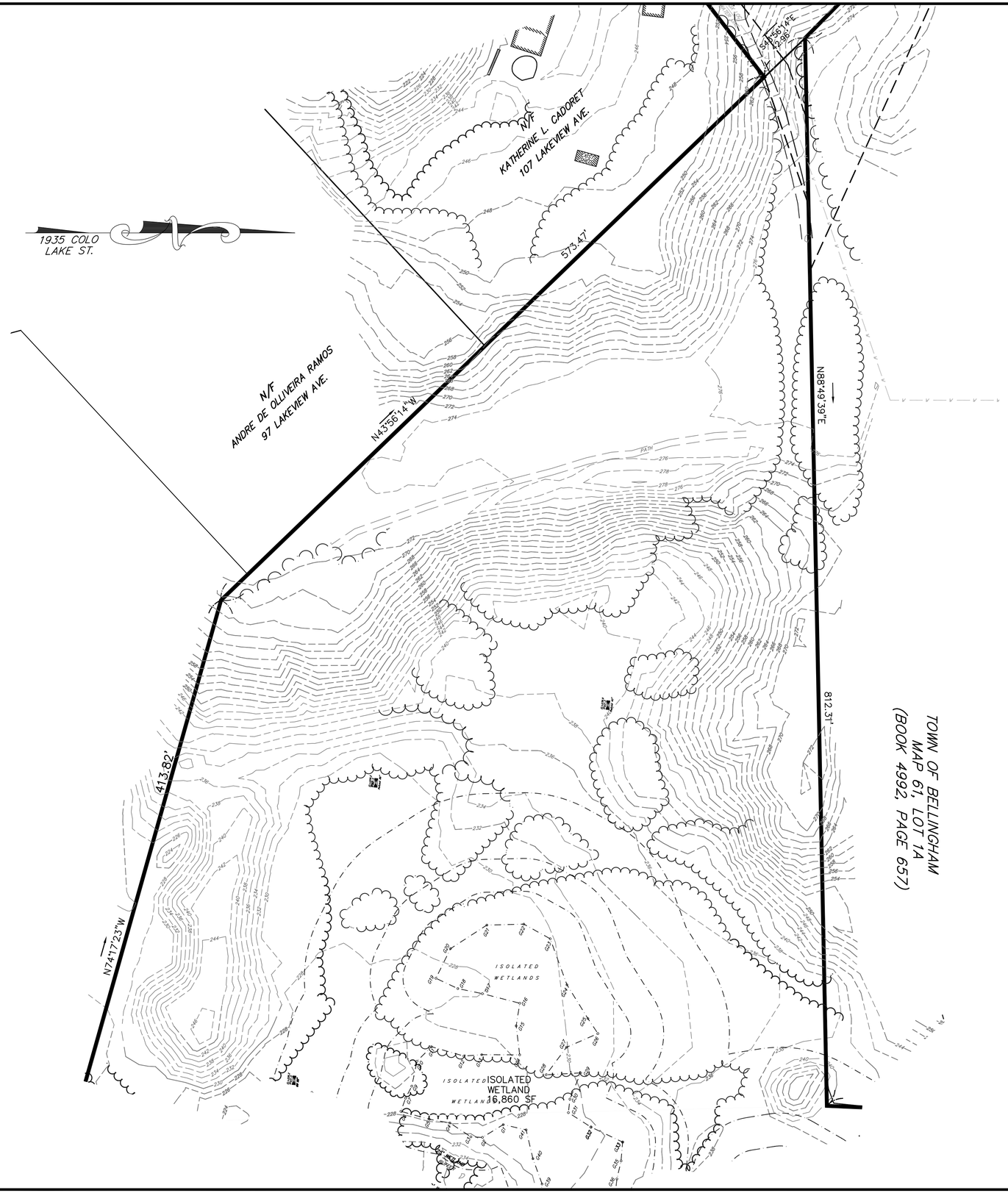

EXISTING CONDITIONS

REVISIONS

No.	DATE	DESCRIPTION
1	04/02/2024	WETLAND DELINEATION
2	07/15/2024	PLG BRD ENG COMMENTS
3	09/26/2024	NEW ROAD LAYOUT (LAKE ST)
4	01/30/2025	PLG BRD COMMENTS/129 UNITS
5	04/09/2025	PLG BRD COMMENTS - BSC 3/19/25
6	04/28/2025	PLG BRD COMMENTS

SITE DEVELOPMENT PLAN
"PROSPECT HILL VILLAGE"
A MULTI-UNIT RESIDENTIAL DEVELOPMENT
BELLINGHAM, MASSACHUSETTS

PREPARED FOR:
WALL STREET DEVELOPMENT CORP.
P.O. BOX 272
WESTWOOD, MASSACHUSETTS

GLM Engineering Consultants, Inc.
19 EXCHANGE STREET
HOLLISTON, MA 01746
P: 508-429-1100
F: 508-429-7160
www.GLMengineering.com

JOB No.	16,590
DATE:	NOV. 30, 2023
SCALE:	1"=40'
SHEET:	6 of 43
PLAN #:	27,871

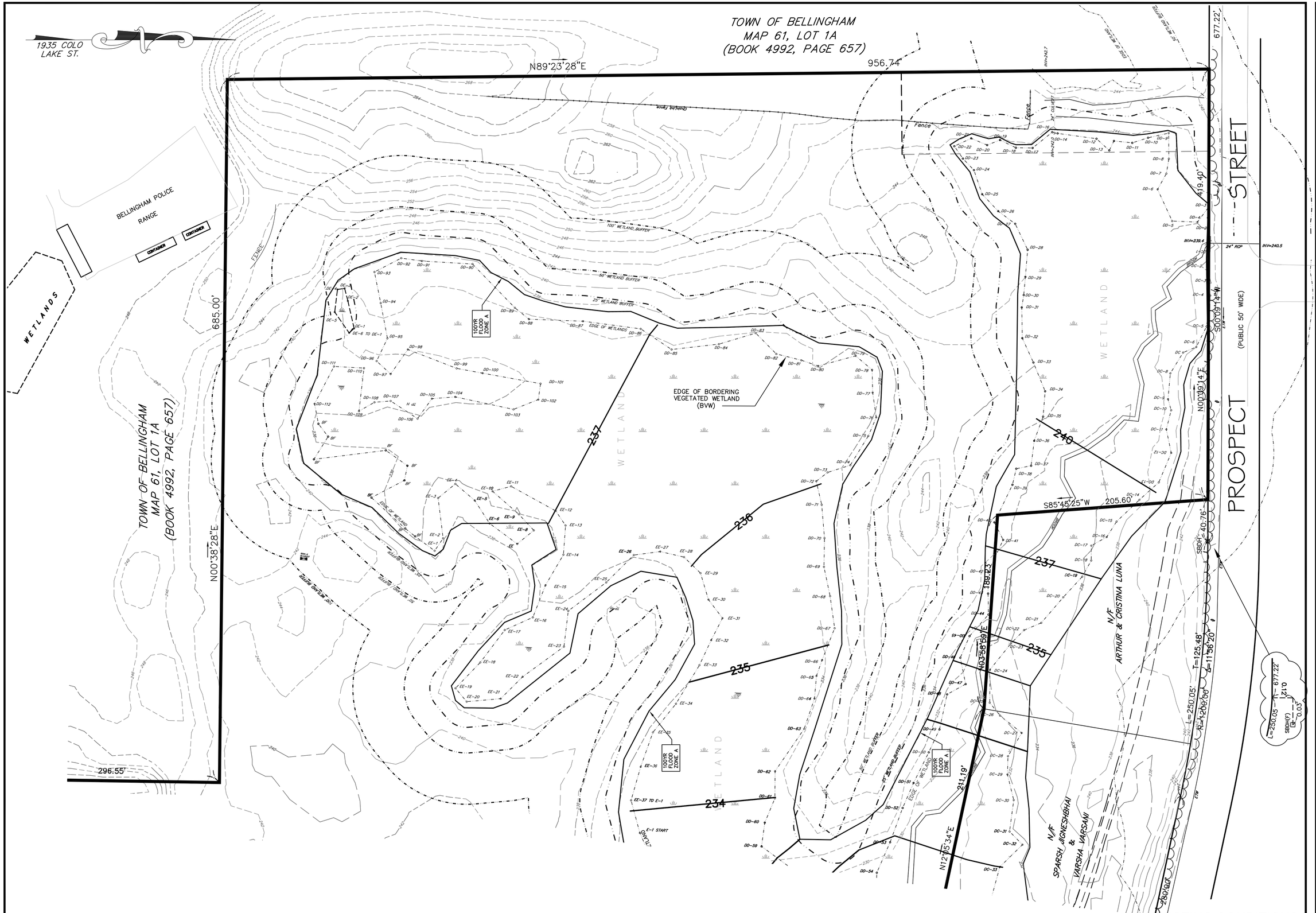

REVISIONS		
No.	DATE	DESCRIPTION
1	04/02/2024	WETLAND DELINEATION
2	07/15/2024	PLG BRD ENG COMMENTS
3	09/26/2024	NEW ROAD LAYOUT (LAKE ST)
4	01/30/2025	PLG BRD COMMENTS/129 UNITS
5	04/09/2025	PLG BRD COMMENTS - BSC 3/19/25
6	04/28/2025	PLG BRD COMMENTS

SITE DEVELOPMENT PLAN
"PROSPECT HILL VILLAGE"
A MULTI-UNIT RESIDENTIAL DEVELOPMENT
BELLINGHAM, MASSACHUSETTS

PREPARED FOR:
WALL STREET DEVELOPMENT CORP.
P.O. BOX 272
WESTWOOD, MASSACHUSETTS

GLM Engineering Consultants, Inc.
19 EXCHANGE STREET
HOLLISTON, MA 01746
P: 508-429-1100
F: 508-429-7160
www.GLMengineering.com

JOB No.	16,590
DATE:	NOV. 30, 2023
SCALE:	1"=40'
SHEET:	7 of 43
PLAN #:	27,871

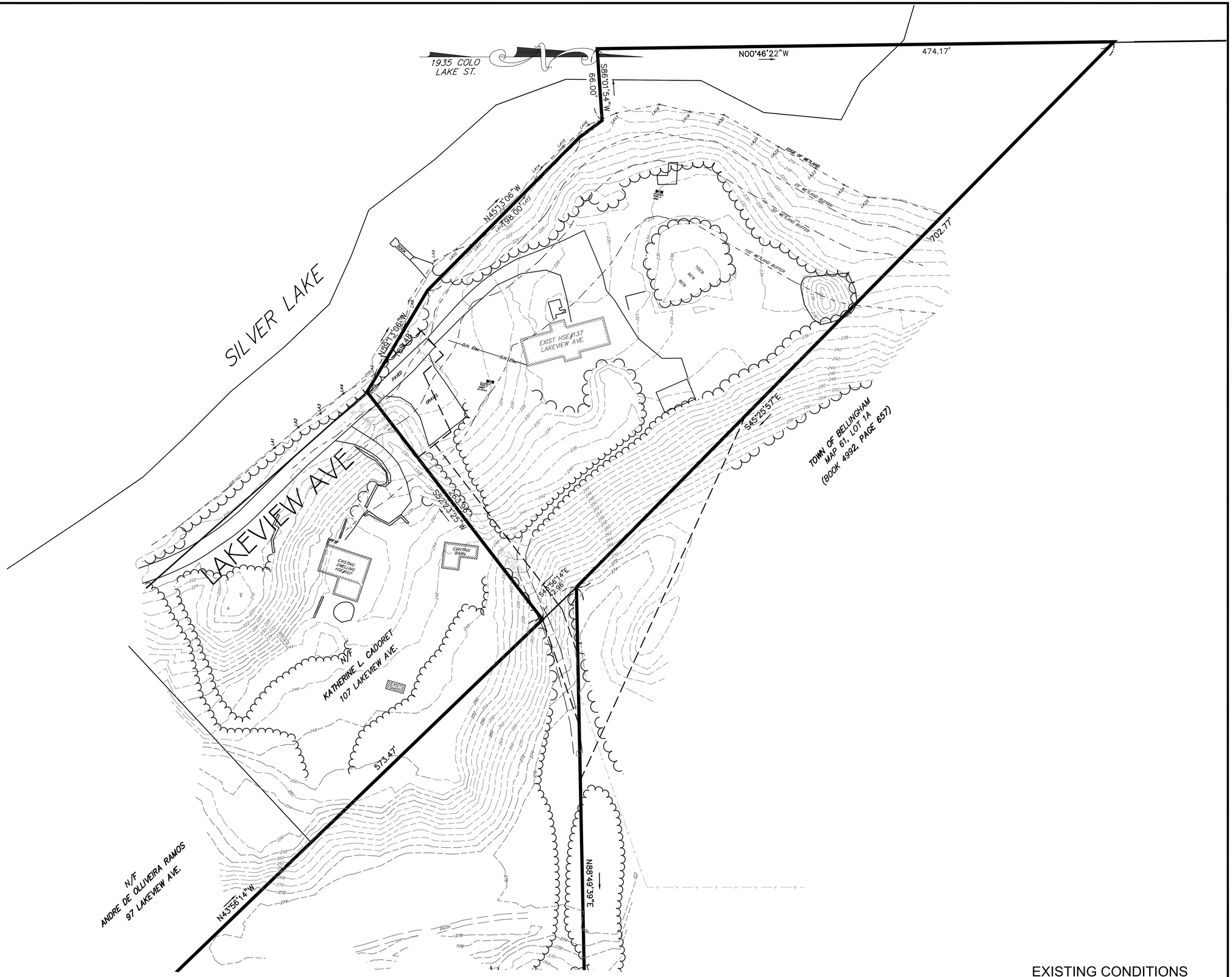

EXISTING CONDITIONS

REVISIONS

No.	DATE	DESCRIPTION
1	04/02/2024	WETLAND DELINEATION
2	07/15/2024	PLG BRD ENG COMMENTS
3	09/26/2024	NEW ROAD LAYOUT (LAKE ST)
4	01/30/2025	PLG BRD COMMENTS/129 UNITS
5	04/09/2025	PLG BRD COMMENTS - BSC 3/19/25
6	04/28/2025	PLG BRD COMMENTS

SITE DEVELOPMENT PLAN
"PROSPECT HILL VILLAGE"
A MULTI-UNIT RESIDENTIAL DEVELOPMENT
BELLINGHAM, MASSACHUSETTS

PREPARED FOR:
WALL STREET DEVELOPMENT CORP.
P.O. BOX 272
WESTWOOD, MASSACHUSETTS

GLM Engineering Consultants, Inc.
19 EXCHANGE STREET
HOLLISTON, MA 01746
P: 508-429-1100
F: 508-429-7160
www.GLMengineering.com

JOB No.	16,590
DATE:	NOV. 30, 2023
SCALE:	1"=40'
SHEET:	8 of 43
PLAN #:	27,871

N/F
WIDOP REALTY TRUST
468 LAKE ST
BELLINGHAM, MA.
MAP 69, LOT 86C
(BOOK 11312, PAGE 607)

1935 COLO LAKE ST.

N/F
THOMAS KOBACK

TOWN OF BELLINGHAM
(BOOK LC 424, PAGE 84)

N43°26'50"W
567.93'
N43°11'15"E
458.97'
S68°06'50"W
L=536.39'
R=1050.00'
T=274.18'
L=334.80'
Δ=18°16'10"
Δ=29°48'10"
T=168.83'
L=968.28'
R=5505.82'
Δ=10°04'35"

200' OUTER RIPARIAN
100' OUTER RIPARIAN
100' INNER RIPARIAN
EXISTING PATH
EXISTING PAVEMENT
HOAG BROOK RIVER
RIVER BANK
HOAG BROOK
WETLANDS
WETLAND
EDGE OF BORDERING VEGETATED WETLAND (BVW)
VERNAL POOL DELINEATION FLAG (TYP)
BORDERING WETLAND DELINEATION FLAG (TYP)
PERENIAL STREAM MEAN ANNUAL HIGH WATER LINE (MAHWL)
RIVERBANK MAHWL FLAG (TYP)
ISOLATED LAND SUBJECT TO FLOODING
24"INV=219.4
24"INV=219.5
24"INV=219.8
GUARDRAIL
ETW

EXISTING CONDITIONS

REVISIONS

No.	DATE	DESCRIPTION
1	04/02/2024	WETLAND DELINEATION
2	07/15/2024	PLG BRD ENG COMMENTS
3	09/26/2024	NEW ROAD LAYOUT (LAKE ST)
4	01/30/2025	PLG BRD COMMENTS/129 UNITS
5	04/09/2025	PLG BRD COMMENTS - BSC 3/19/25
6	04/28/2025	PLG BRD COMMENTS

SITE DEVELOPMENT PLAN
"PROSPECT HILL VILLAGE"
A MULTI-UNIT RESIDENTIAL DEVELOPMENT
BELLINGHAM, MASSACHUSETTS

PREPARED FOR:
WALL STREET DEVELOPMENT CORP.
P.O. BOX 272
WESTWOOD, MASSACHUSETTS

GLM Engineering Consultants, Inc.
19 EXCHANGE STREET
HOLLISTON, MA 01746
P: 508-429-1100
F: 508-429-7160
www.GLMengineering.com

JOB No.	16,590
DATE:	NOV. 30, 2023
SCALE:	1"=40'
SHEET:	9 of 43
PLAN #:	27,871

PHASING:

PHASE I
Units: 1–39
Roadway A (0+00 – 9+00)
Roadway B (Full length)

PHASE II
Units: 41–66 & 97–120
Roadway C (0+00 – 22+50)

PHASE III
Units: 67–96 & 121–129
Roadway C
Emergency Access Road

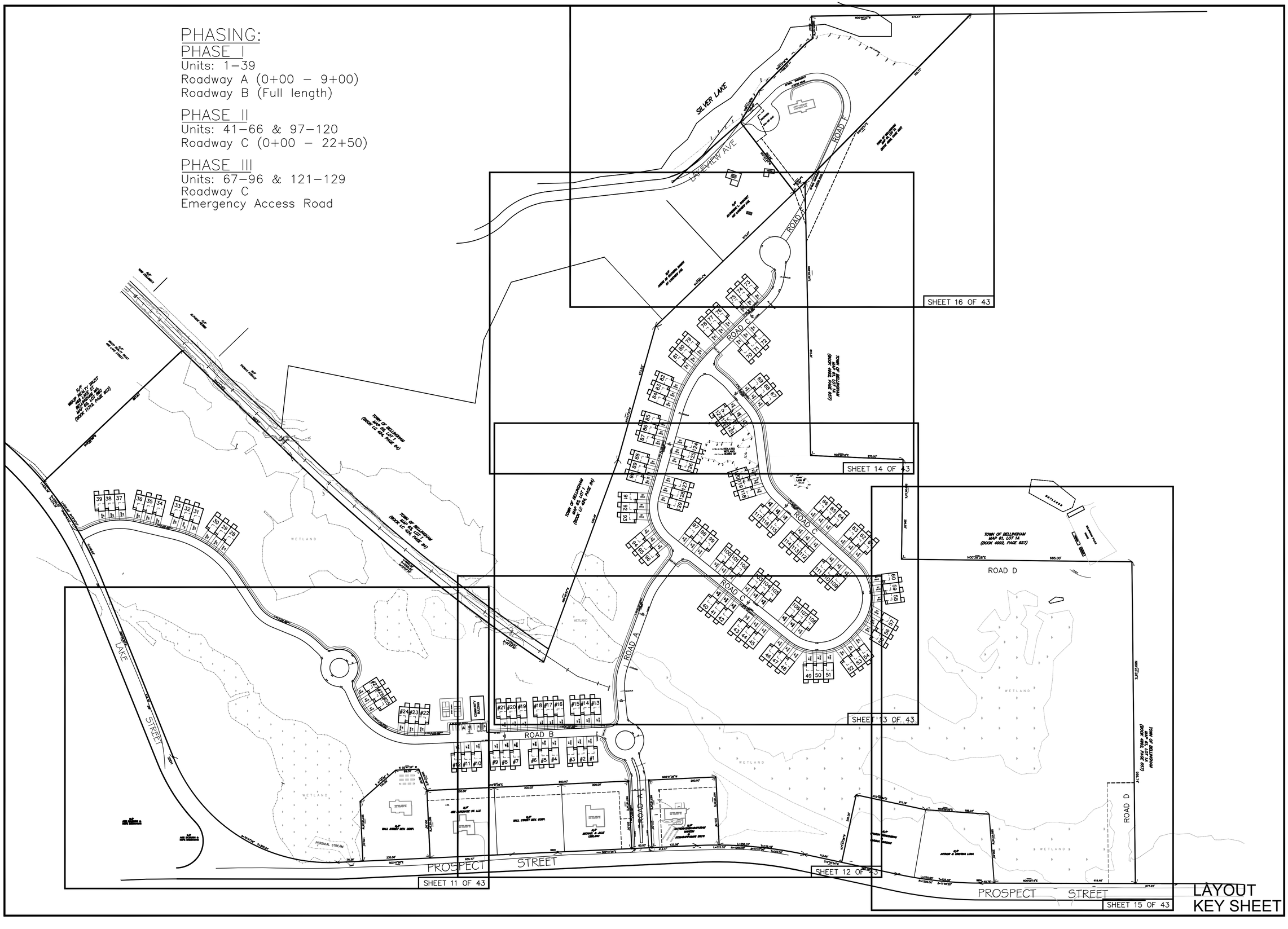

LAYOUT
KEY SHEET

REVISIONS		
No.	DATE	DESCRIPTION
1	04/02/2024	WETLAND DELINEATION
2	07/15/2024	PLG BRD ENG COMMENTS
3	09/26/2024	NEW ROAD LAYOUT (LAKE ST)
4	01/30/2025	PLG BRD COMMENTS/129 UNITS
5	04/09/2025	PLG BRD COMMENTS - BSC 3/19/25
6	04/28/2025	PLG BRD COMMENTS

SITE DEVELOPMENT PLAN
"PROSPECT HILL VILLAGE"
A MULTI-UNIT RESIDENTIAL DEVELOPMENT
BELLINGHAM, MASSACHUSETTS

PREPARED FOR:
WALL STREET DEVELOPMENT CORP.
P.O. BOX 272
WESTWOOD, MASSACHUSETTS

GLM Engineering Consultants, Inc.
19 EXCHANGE STREET
HOLLISTON, MA 01746
P: 508–429–1100
F: 508–429–7160
www.GLMengineering.com

JOB No.	16,590
DATE:	NOV. 30, 2023
SCALE:	1"=120'
SHEET:	10 of 43
PLAN #:	27,871

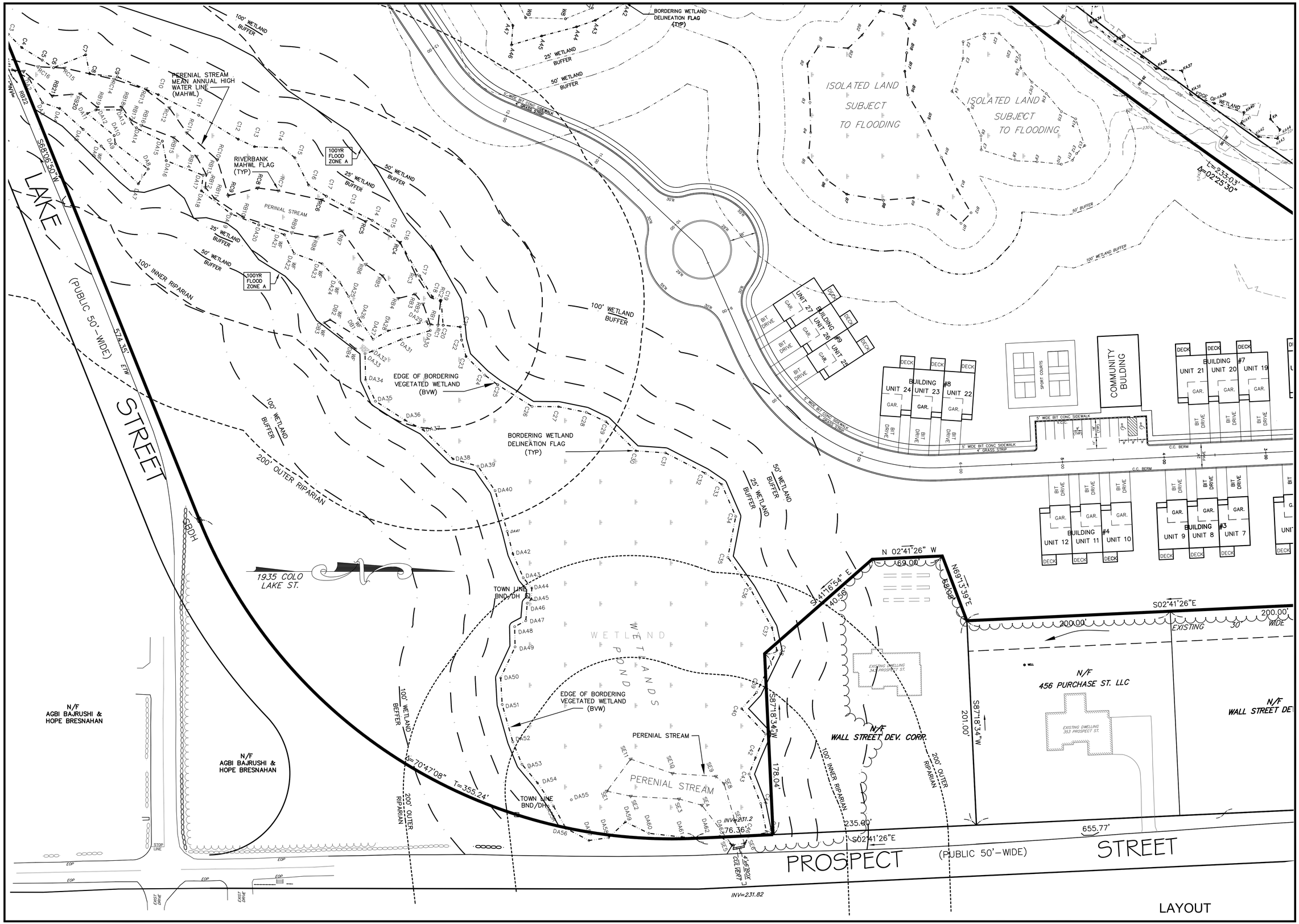

REVISIONS

No.	DATE	DESCRIPTION
1	04/02/2024	WETLAND DELINEATION
2	07/15/2024	PLG BRD ENG COMMENTS
3	09/26/2024	NEW ROAD LAYOUT (LAKE ST)
4	01/30/2025	PLG BRD COMMENTS/129 UNITS
5	04/09/2025	PLG BRD COMMENTS - BSC 3/19/25
6	04/28/2025	PLG BRD COMMENTS

SITE DEVELOPMENT PLAN
"PROSPECT HILL VILLAGE"
A MULTI-UNIT RESIDENTIAL DEVELOPMENT
BELLINGHAM, MASSACHUSETTS

PREPARED FOR:
WALL STREET DEVELOPMENT CORP.
P.O. BOX 272
WESTWOOD, MASSACHUSETTS

GLM Engineering Consultants, Inc.
19 EXCHANGE STREET
HOLLISTON, MA 01746
P: 508-429-1100
F: 508-429-7160
www.GLMengineering.com

JOB No.	16,590
DATE:	NOV. 30, 2023
SCALE:	1"=40'
SHEET:	11 of 43
PLAN #:	27,871

N/F
WIDOP REALTY TRUST
468 LAKE ST
BELLINGHAM MA.
MAP 69, LOT 86C
(BOOK 11312, PAGE 607)

N/F
WIDOP REALTY TRUST
468 LAKE STREET

N/F
THOMAS KOBACK

1935 COLO
LAKE ST.

TOWN OF BELLINGHAM
MAP 65, LOT 1
(BOOK LC 424, PAGE 84)

TOWN OF BELLINGHAM
MAP 65, LOT 1
(BOOK LC 424, PAGE 84)

L=536.39'
N43°26'50"W
567.93'
L=536.39'
R=1050.00'
T=274.18'
L=334.80'
Δ=29°16'10"
Δ=18°16'10"
L=168.83'
S68°06'50"W
L=968.28'
R=5505.82'
Δ=10°04'35"
N44°11'15"E
452.97'

LAKE STREET

NOTE:
SIGHT LINE TRIANGLE SHOWN IN THE TRAFFIC REPORT SHALL BE MAINTAINED RELATED, SIGNAGE, VEGETATION AND SNOW.

BUILDING #13: UNIT 39, UNIT 38, UNIT 37
BUILDING #12: UNIT 36, UNIT 35, UNIT 34
BUILDING #11: UNIT 33, UNIT 32, UNIT 31
BUILDING #10: UNIT 30, UNIT 29, UNIT 28
DECK, GAR., BIT. DRIVE

PROPOSED DBL YELLOW LINE (100' From Lake St.)
5' WIDE BIT CONC SIDEWALK & GRASS STRIP
STREET SIGN
STOP
APPROX B.V.W.
EW
24"INV=219.4
24"INV=219.5
24"INV=219.8
GUARDRAIL

WETLANDS
RIVER BANK
HOAG BROOK RIVER
HOAG BROOK
EDGE OF BORDERING VEGETATED WETLAND (BVW)
WETLAND
VERNAL POOL DELINEATION FLAG (TYP)
BORDERING WETLAND DELINEATION FLAG (TYP)
PERENIAL STREAM MEAN ANNUAL HIGH WATER LINE (MAHWL)
RIVERBANK MAHWL FLAG (TYP)
100YR FLOOD ZONE A
ISOLATED LAND SUBJECT TO FLOODING
ISOLATED LAND SUBJECT TO FLOODIN

100' WETLAND BUFFER
100' OUTER RIPARIAN
200' OUTER RIPARIAN
100' INNER RIPARIAN
25' WETLAND BUFFER
50' WETLAND BUFFER

LAYOUT

REVISIONS		
No.	DATE	DESCRIPTION
1	04/02/2024	WETLAND DELINEATION
2	07/15/2024	PLG BRD ENG COMMENTS
3	09/26/2024	NEW ROAD LAYOUT (LAKE ST)
4	01/30/2025	PLG BRD COMMENTS/129 UNITS
5	04/09/2025	PLG BRD COMMENTS - BSC 3/19/25
6	04/28/2025	PLG BRD COMMENTS

SITE DEVELOPMENT PLAN
"PROSPECT HILL VILLAGE"
A MULTI-UNIT RESIDENTIAL DEVELOPMENT
BELLINGHAM, MASSACHUSETTS

PREPARED FOR:
WALL STREET DEVELOPMENT CORP.
P.O. BOX 272
WESTWOOD, MASSACHUSETTS

GLM Engineering Consultants, Inc.
19 EXCHANGE STREET
HOLLISTON, MA 01746
P: 508-429-1100
F: 508-429-7160
www.GLMengineering.com

JOB No.	16,590
DATE:	NOV. 30, 2023
SCALE:	1"=40'
SHEET:	12 of 43
PLAN #:	27,871

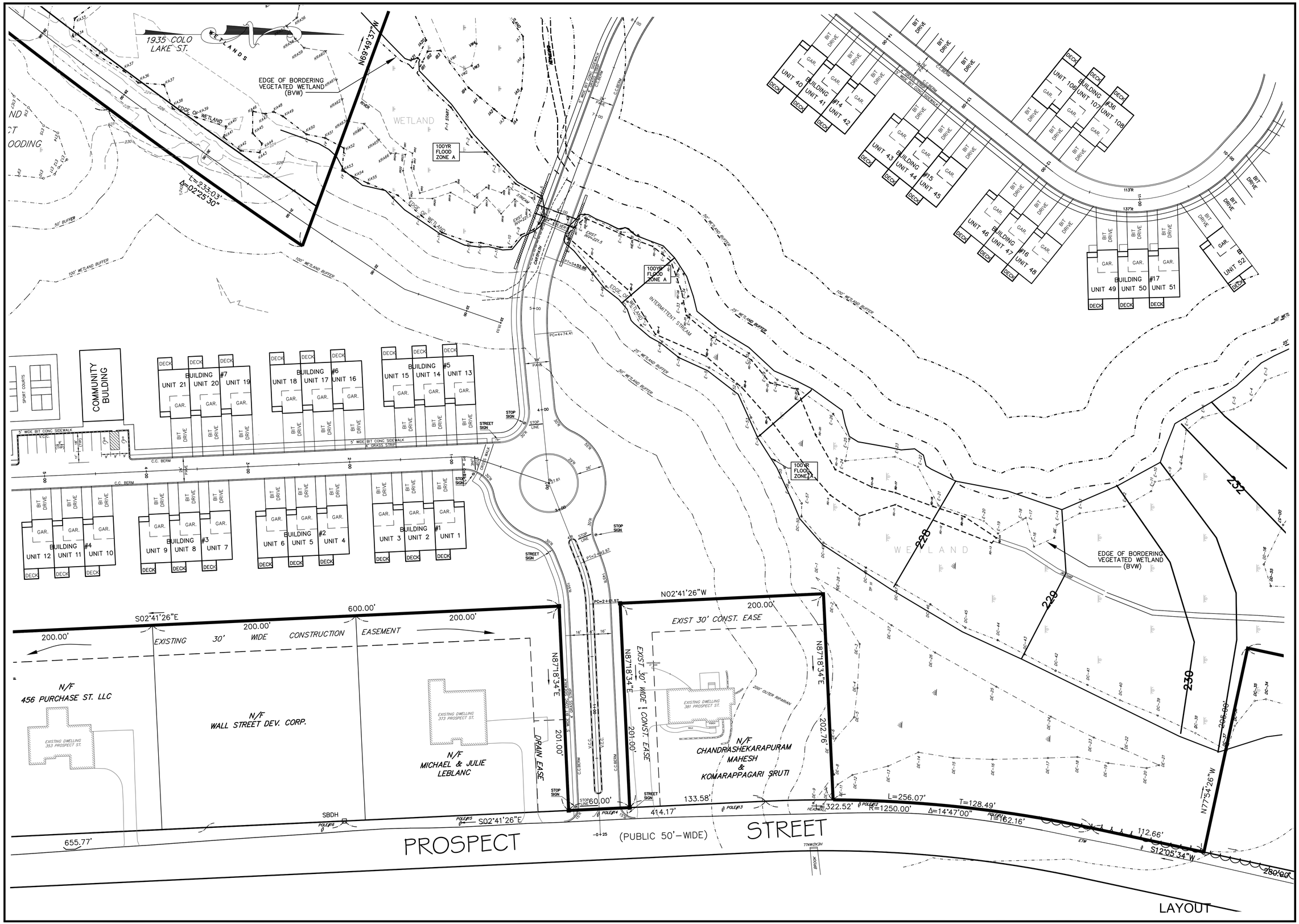

REVISIONS

No.	DATE	DESCRIPTION
1	04/02/2024	WETLAND DELINEATION
2	07/15/2024	PLG BRD ENG COMMENTS
3	09/26/2024	NEW ROAD LAYOUT (LAKE ST)
4	01/30/2025	PLG BRD COMMENTS/129 UNITS
5	04/09/2025	PLG BRD COMMENTS - BSC 3/19/25
6	04/28/2025	PLG BRD COMMENTS

SITE DEVELOPMENT PLAN
"PROSPECT HILL VILLAGE"
A MULTI-UNIT RESIDENTIAL DEVELOPMENT
BELLINGHAM, MASSACHUSETTS

PREPARED FOR:
WALL STREET DEVELOPMENT CORP.
P.O. BOX 272
WESTWOOD, MASSACHUSETTS

GLM Engineering Consultants, Inc.
19 EXCHANGE STREET
HOLLISTON, MA 01746
P: 508-429-1100
F: 508-429-7160
www.GLMengineering.com

JOB No.	16,590
DATE:	NOV. 30, 2023
SCALE:	1"=40'
SHEET:	13 of 43
PLAN #:	27,871

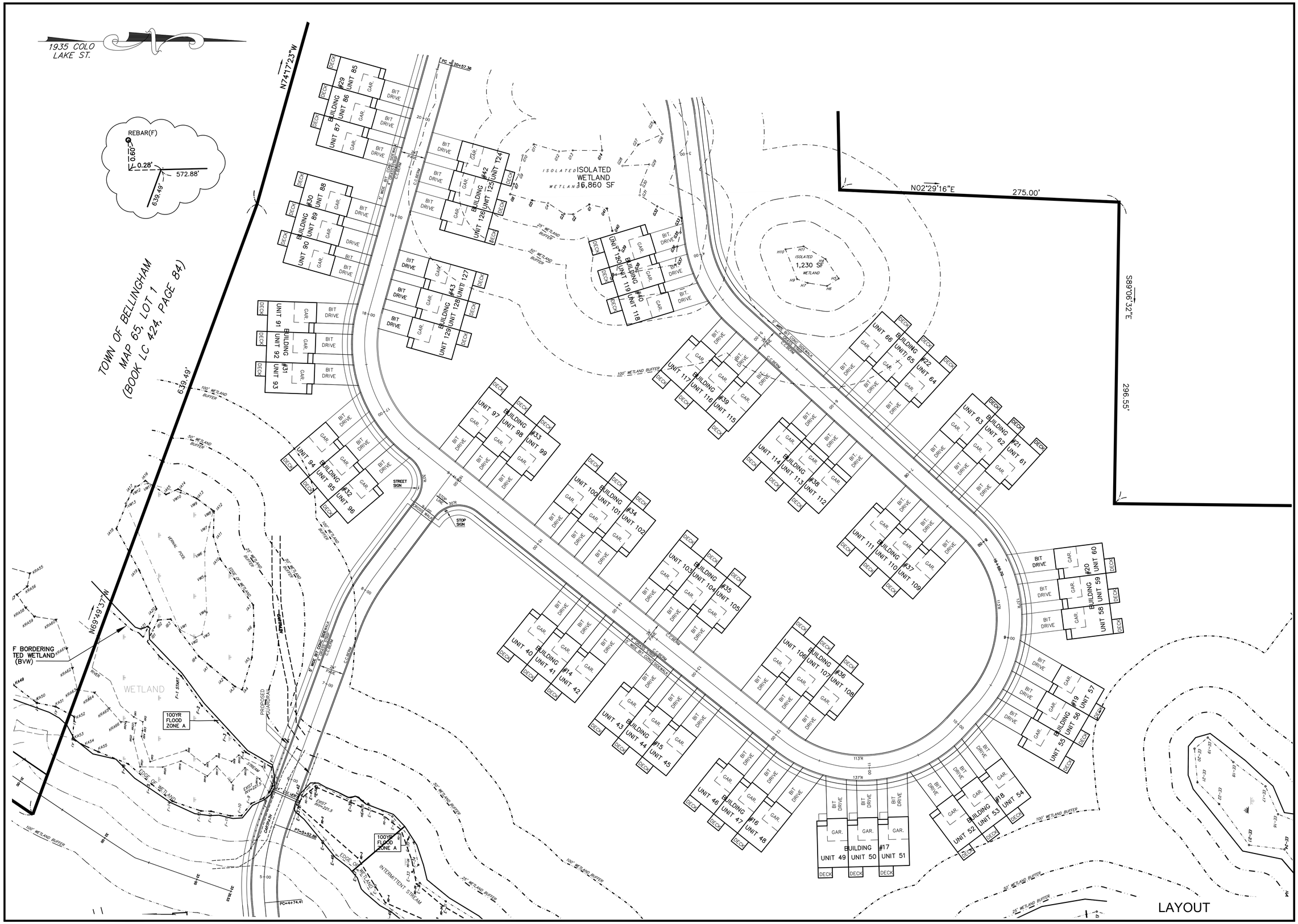

REVISIONS

No.	DATE	DESCRIPTION
1	04/02/2024	WETLAND DELINEATION
2	07/15/2024	PLG BRD ENG COMMENTS
3	09/26/2024	NEW ROAD LAYOUT (LAKE ST)
4	01/30/2025	PLG BRD COMMENTS/129 UNITS
5	04/09/2025	PLG BRD COMMENTS - BSC 3/19/25
6	04/28/2025	PLG BRD COMMENTS

SITE DEVELOPMENT PLAN
"PROSPECT HILL VILLAGE"
A MULTI-UNIT RESIDENTIAL DEVELOPMENT
BELLINGHAM, MASSACHUSETTS

PREPARED FOR:
WALL STREET DEVELOPMENT CORP.
P.O. BOX 272
WESTWOOD, MASSACHUSETTS

GLM Engineering Consultants, Inc.
19 EXCHANGE STREET
HOLLISTON, MA 01746
P: 508-429-1100
F: 508-429-7160
www.GLMengineering.com

JOB No.	16,590
DATE:	NOV. 30, 2023
SCALE:	1"=40'
SHEET:	14 of 43
PLAN #:	27,871

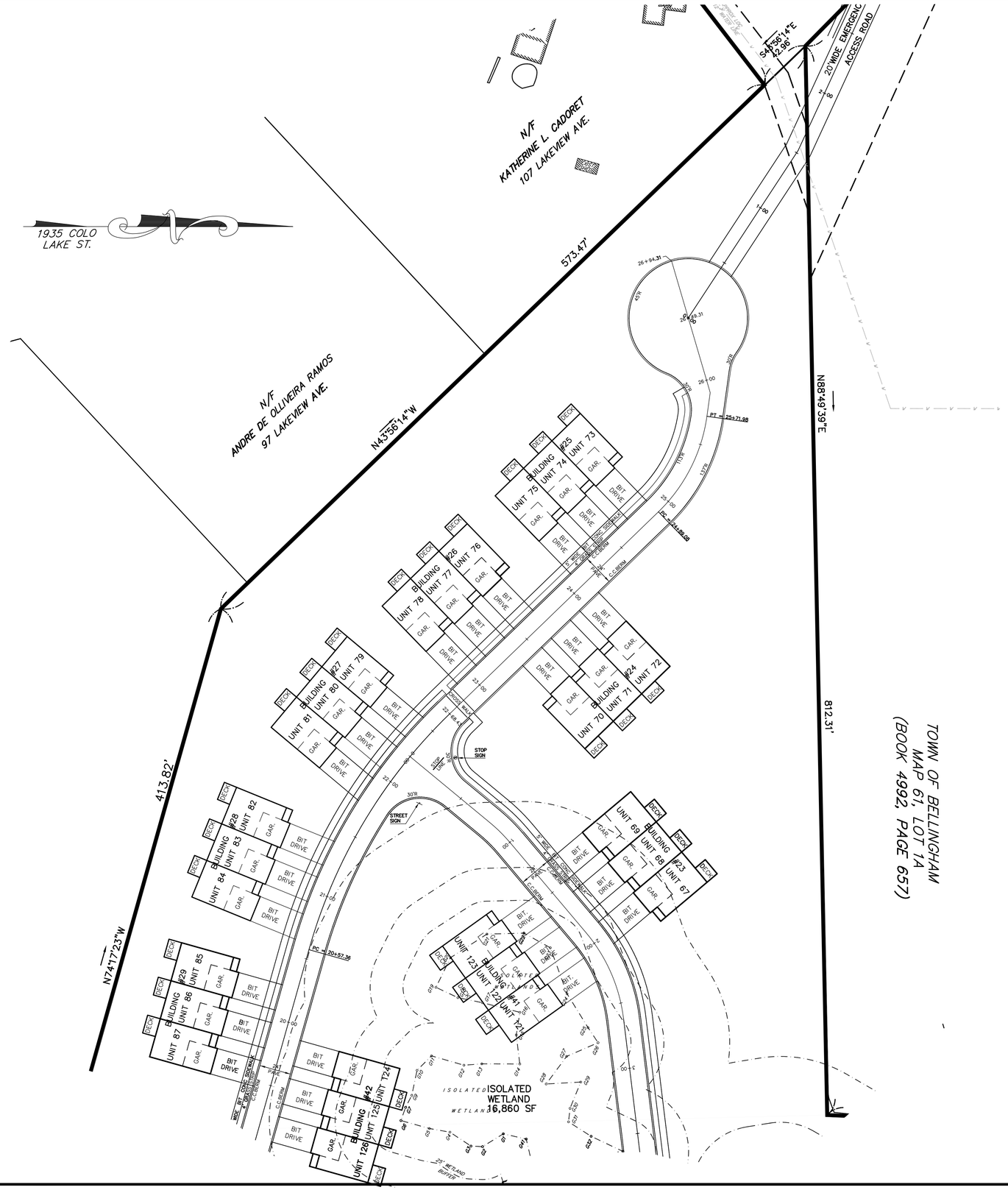

LAYOUT

REVISIONS		
No.	DATE	DESCRIPTION
1	04/02/2024	WETLAND DELINEATION
2	07/15/2024	PLG BRD ENG COMMENTS
3	09/26/2024	NEW ROAD LAYOUT (LAKE ST)
4	01/30/2025	PLG BRD COMMENTS/129 UNITS
5	04/09/2025	PLG BRD COMMENTS - BSC 3/19/25
6	04/28/2025	PLG BRD COMMENTS

SITE DEVELOPMENT PLAN
"PROSPECT HILL VILLAGE"
A MULTI-UNIT RESIDENTIAL DEVELOPMENT
BELLINGHAM, MASSACHUSETTS

PREPARED FOR:
WALL STREET DEVELOPMENT CORP.
P.O. BOX 272
WESTWOOD, MASSACHUSETTS

GLM Engineering Consultants, Inc.
19 EXCHANGE STREET
HOLLISTON, MA 01746
P: 508-429-1100
F: 508-429-7160
www.GLMengineering.com

JOB No.	16,590
DATE:	NOV. 30, 2023
SCALE:	1"=40'
SHEET:	15 of 43
PLAN #:	27,871

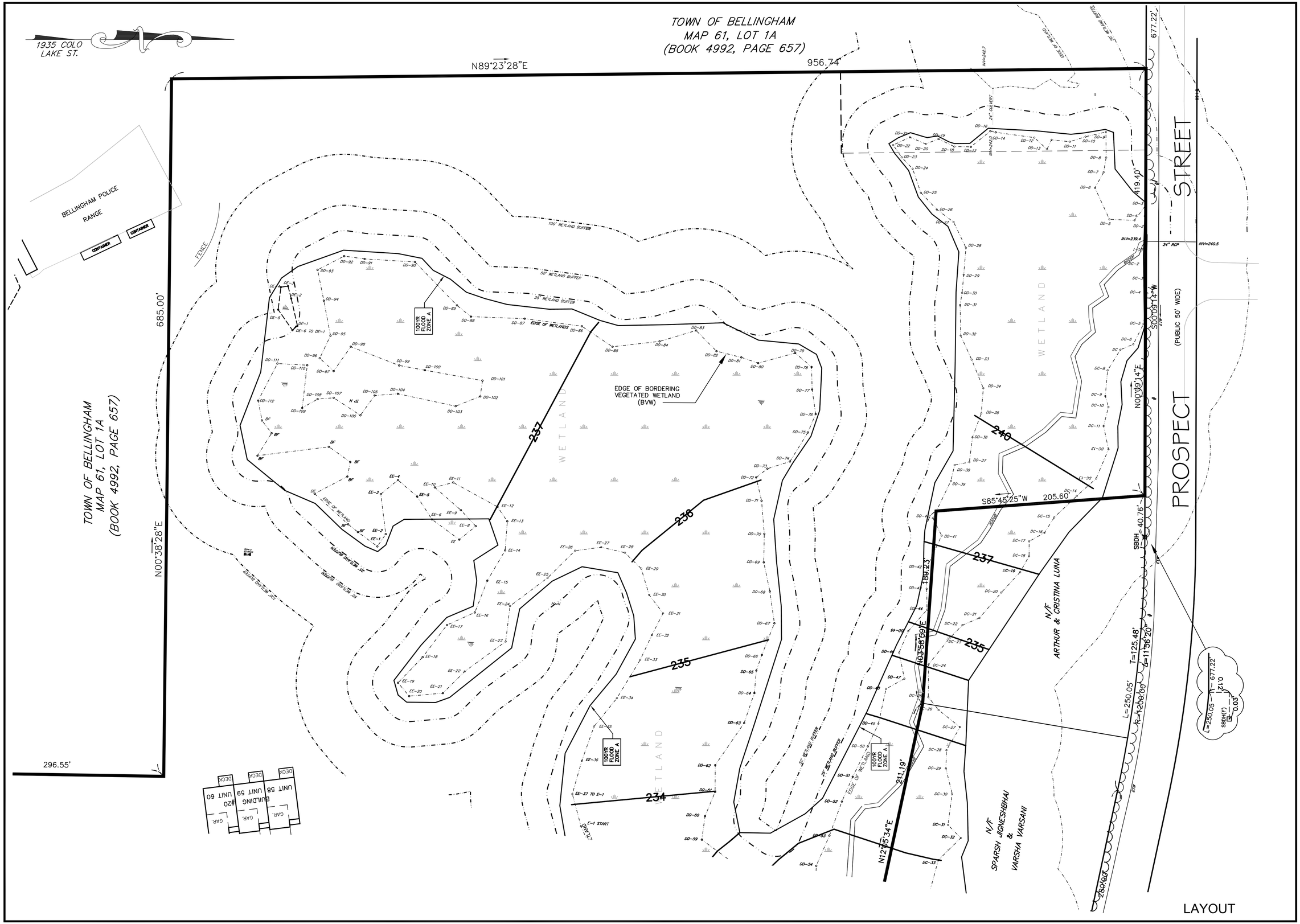

REVISIONS

No.	DATE	DESCRIPTION
1	04/02/2024	WETLAND DELINEATION
2	07/15/2024	PLG BRD ENG COMMENTS
3	09/26/2024	NEW ROAD LAYOUT (LAKE ST)
4	01/30/2025	PLG BRD COMMENTS/129 UNITS
5	04/09/2025	PLG BRD COMMENTS - BSC 3/19/25
6	04/28/2025	PLG BRD COMMENTS

SITE DEVELOPMENT PLAN
"PROSPECT HILL VILLAGE"
A MULTI-UNIT RESIDENTIAL DEVELOPMENT
BELLINGHAM, MASSACHUSETTS

PREPARED FOR:
WALL STREET DEVELOPMENT CORP.
P.O. BOX 272
WESTWOOD, MASSACHUSETTS

GLM Engineering Consultants, Inc.
19 EXCHANGE STREET
HOLLISTON, MA 01746
P: 508-429-1100
F: 508-429-7160
www.GLMengineering.com

JOB No.	16,590
DATE:	NOV. 30, 2023
SCALE:	1"=40'
SHEET:	16 of 43
PLAN #:	27,871

LAYOUT

REVISIONS		
No.	DATE	DESCRIPTION
1	04/02/2024	WETLAND DELINEATION
2	07/15/2024	PLG BRD ENG COMMENTS
3	09/26/2024	NEW ROAD LAYOUT (LAKE ST)
4	01/30/2025	PLG BRD COMMENTS/129 UNITS
5	04/09/2025	PLG BRD COMMENTS - BSC 3/19/25
6	04/28/2025	PLG BRD COMMENTS

SITE DEVELOPMENT PLAN
"PROSPECT HILL VILLAGE"
A MULTI-UNIT RESIDENTIAL DEVELOPMENT
BELLINGHAM, MASSACHUSETTS

PREPARED FOR:
WALL STREET DEVELOPMENT CORP.
P.O. BOX 272
WESTWOOD, MASSACHUSETTS

GLM Engineering Consultants, Inc.
19 EXCHANGE STREET
HOLLISTON, MA 01746
P: 508-429-1100
F: 508-429-7160
www.GLMengineering.com

JOB No.	16,590
DATE:	NOV. 30, 2023
SCALE:	1"=40'
SHEET:	17 of 43
PLAN #:	27,871

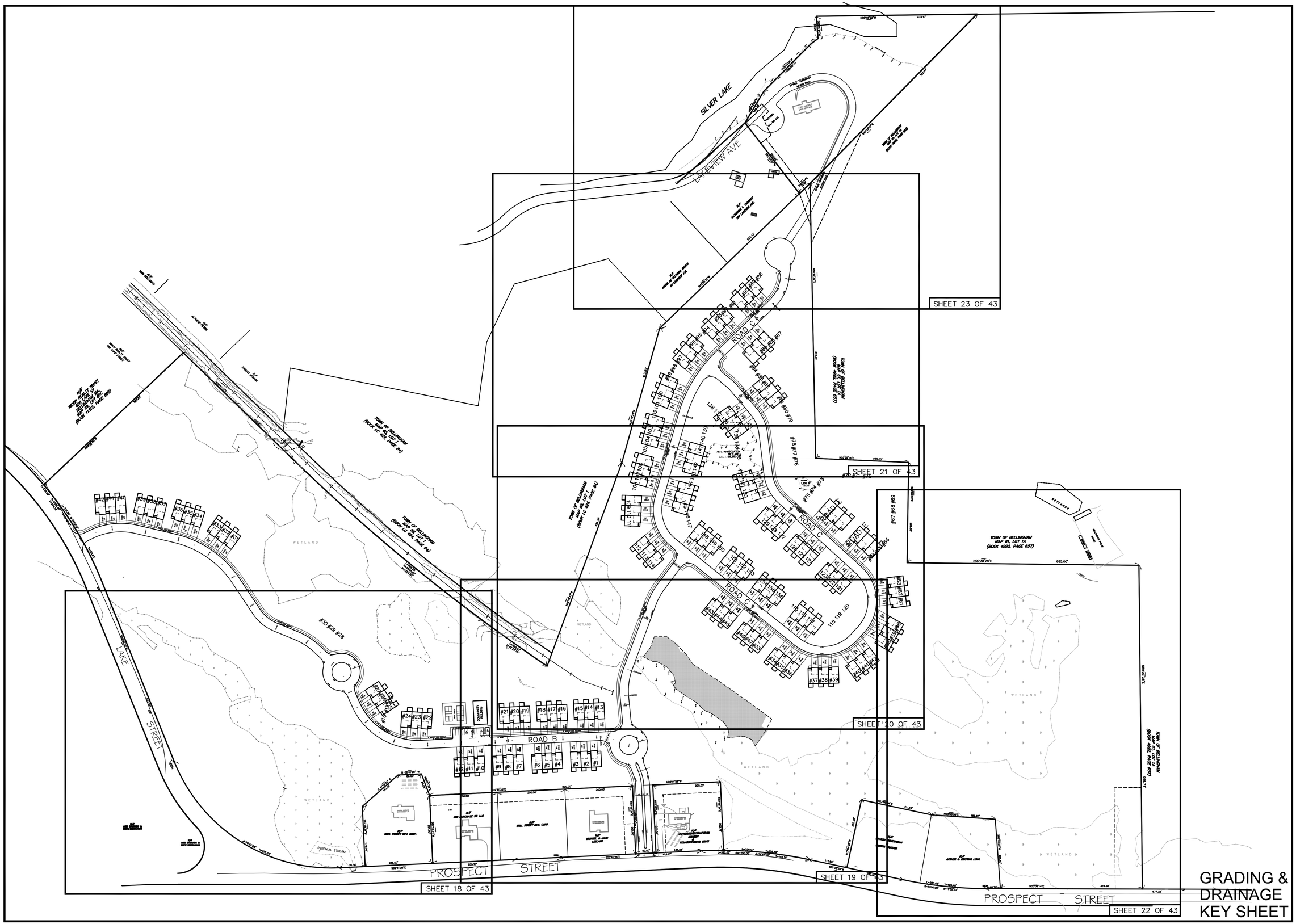

GRADING & DRAINAGE KEY SHEET

REVISIONS

No.	DATE	DESCRIPTION
1	04/02/2024	WETLAND DELINEATION
2	07/15/2024	PLG BRD ENG COMMENTS
3	09/26/2024	NEW ROAD LAYOUT (LAKE ST)
4	01/30/2025	PLG BRD COMMENTS/129 UNITS
5	04/09/2025	PLG BRD COMMENTS - BSC 3/19/25
6	04/28/2025	PLG BRD COMMENTS

SITE DEVELOPMENT PLAN
"PROSPECT HILL VILLAGE"
A MULTI-UNIT RESIDENTIAL DEVELOPMENT
BELLINGHAM, MASSACHUSETTS

PREPARED FOR:
WALL STREET DEVELOPMENT CORP.
P.O. BOX 272
WESTWOOD, MASSACHUSETTS

GLM Engineering Consultants, Inc.
19 EXCHANGE STREET
HOLLISTON, MA 01746
P: 508-429-1100
F: 508-429-7160
www.GLMengineering.com

JOB No.	16,590
DATE:	NOV. 30, 2023
SCALE:	1"=120'
SHEET:	18 of 43
PLAN #:	27,871

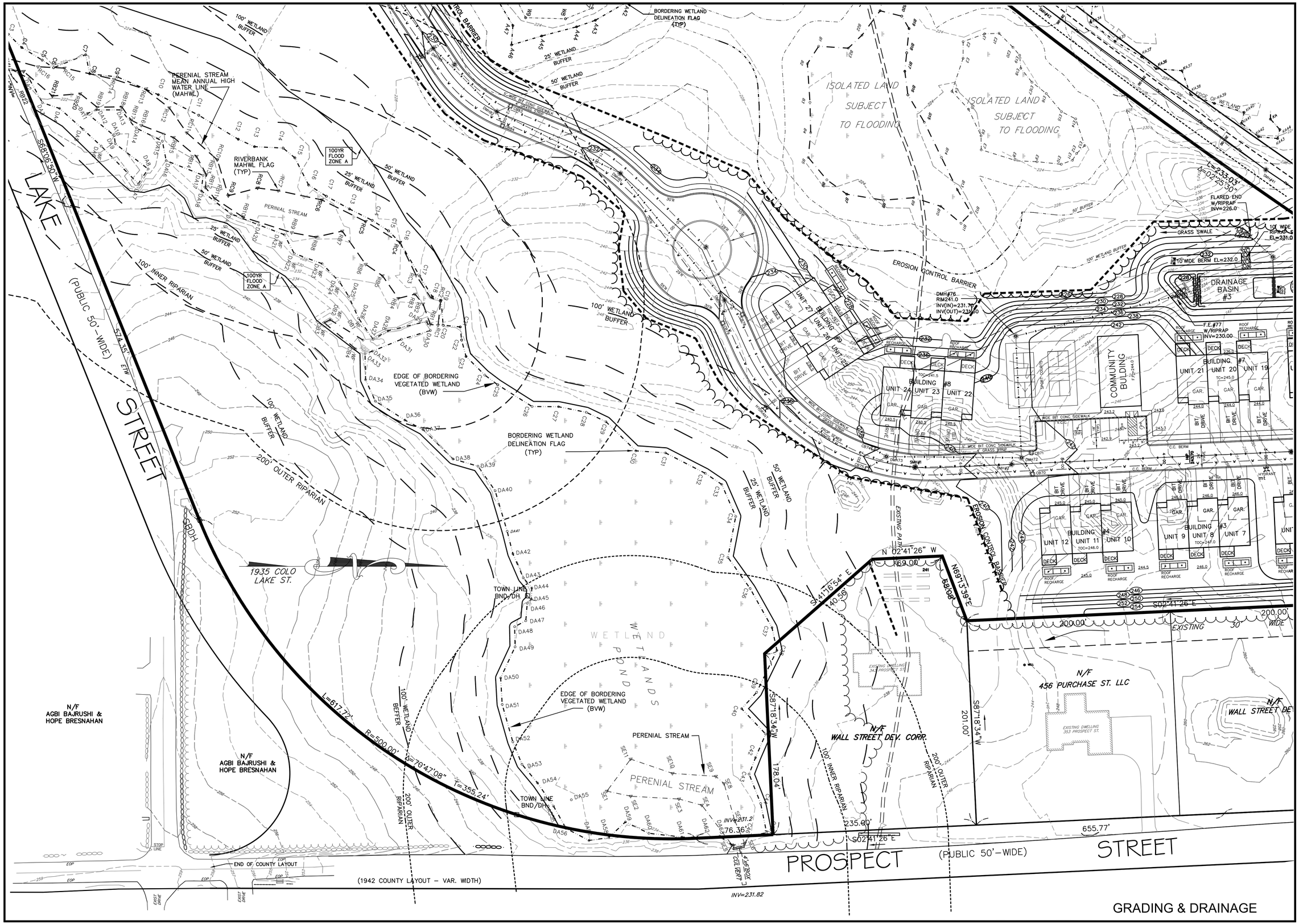

REVISIONS

No.	DATE	DESCRIPTION
1	04/02/2024	WETLAND DELINEATION
2	07/15/2024	PLG BRD ENG COMMENTS
3	09/26/2024	NEW ROAD LAYOUT (LAKE ST)
4	01/30/2025	PLG BRD COMMENTS/129 UNITS
5	04/09/2025	PLG BRD COMMENTS - BSC 3/19/25
6	04/28/2025	PLG BRD COMMENTS

SITE DEVELOPMENT PLAN "PROSPECT HILL VILLAGE" A MULTI-UNIT RESIDENTIAL DEVELOPMENT BELLINGHAM, MASSACHUSETTS

PREPARED FOR:
WALL STREET DEVELOPMENT CORP.
P.O. BOX 272
WESTWOOD, MASSACHUSETTS

GLM Engineering Consultants, Inc.
19 EXCHANGE STREET
HOLLISTON, MA 01746
P: 508-429-1100
F: 508-429-7160
www.GLMengineering.com

JOB No.	16,590
DATE:	NOV. 30, 2023
SCALE:	1"=40'
SHEET:	19 of 43
PLAN #:	27,871

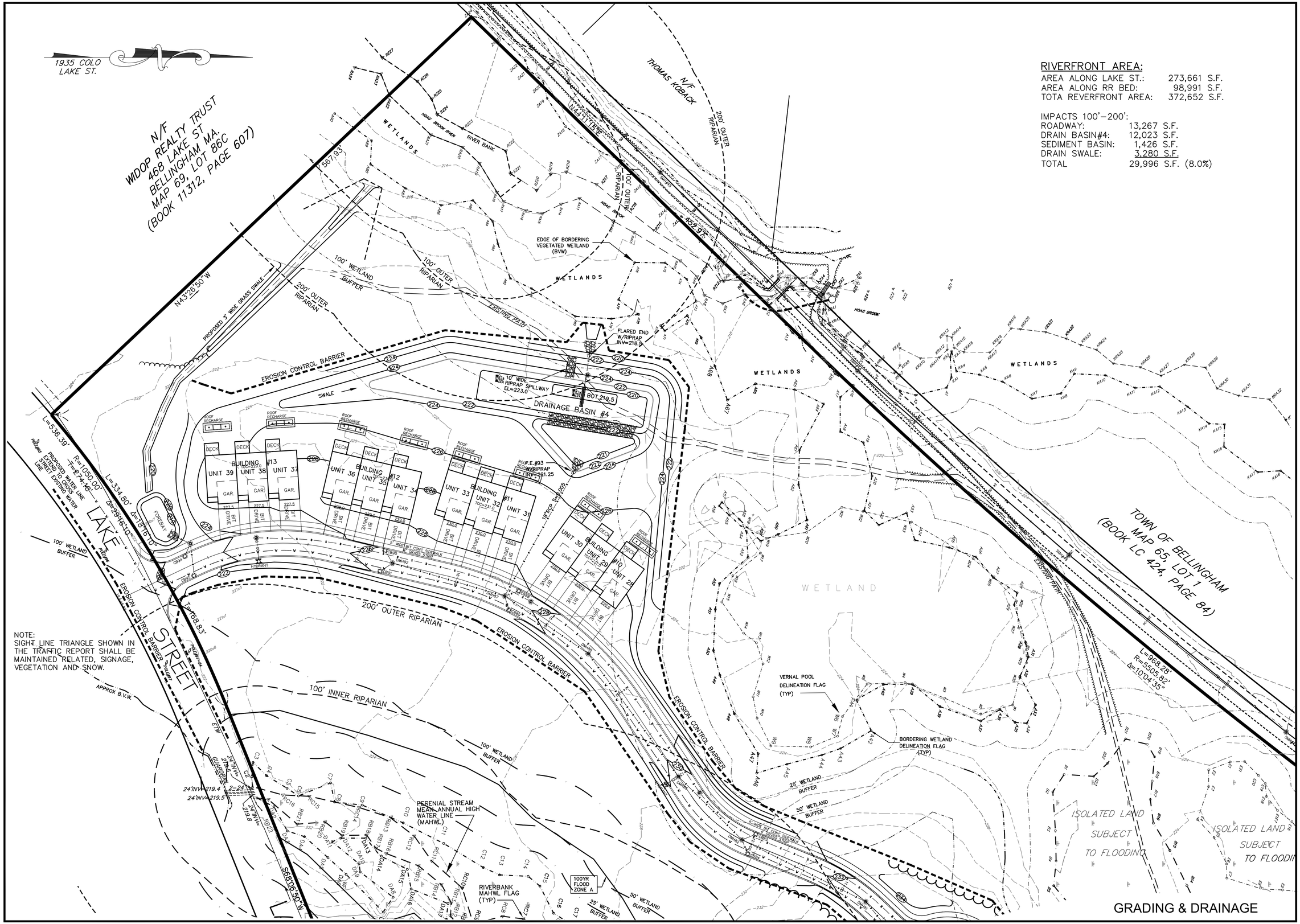

RIVERFRONT AREA:

AREA ALONG LAKE ST.:	273,661 S.F.
AREA ALONG RR BED:	98,991 S.F.
TOTA REVERFRONT AREA:	372,652 S.F.

IMPACTS 100'–200':

ROADWAY:	13,267 S.F.
DRAIN BASIN#4:	12,023 S.F.
SEDIMENT BASIN:	1,426 S.F.
DRAIN SWALE:	3,280 S.F.
TOTAL	29,996 S.F. (8.0%)

REVISIONS

No.	DATE	DESCRIPTION
1	04/02/2024	WETLAND DELINEATION
2	07/15/2024	PLG BRD ENG COMMENTS
3	09/26/2024	NEW ROAD LAYOUT (LAKE ST)
4	01/30/2025	PLG BRD COMMENTS/129 UNITS
5	04/09/2025	PLG BRD COMMENTS - BSC 3/19/25
6	04/28/2025	PLG BRD COMMENTS

SITE DEVELOPMENT PLAN
"PROSPECT HILL VILLAGE"
A MULTI-UNIT RESIDENTIAL DEVELOPMENT
BELLINGHAM, MASSACHUSETTS

PREPARED FOR:
WALL STREET DEVELOPMENT CORP.
P.O. BOX 272
WESTWOOD, MASSACHUSETTS

GLM Engineering Consultants, Inc.
19 EXCHANGE STREET
HOLLISTON, MA 01746
P: 508–429–1100
F: 508–429–7160
www.GLMengineering.com

JOB No.	16,590
DATE:	NOV. 30, 2023
SCALE:	1"=40'
SHEET:	20 of 43
PLAN #:	27,871

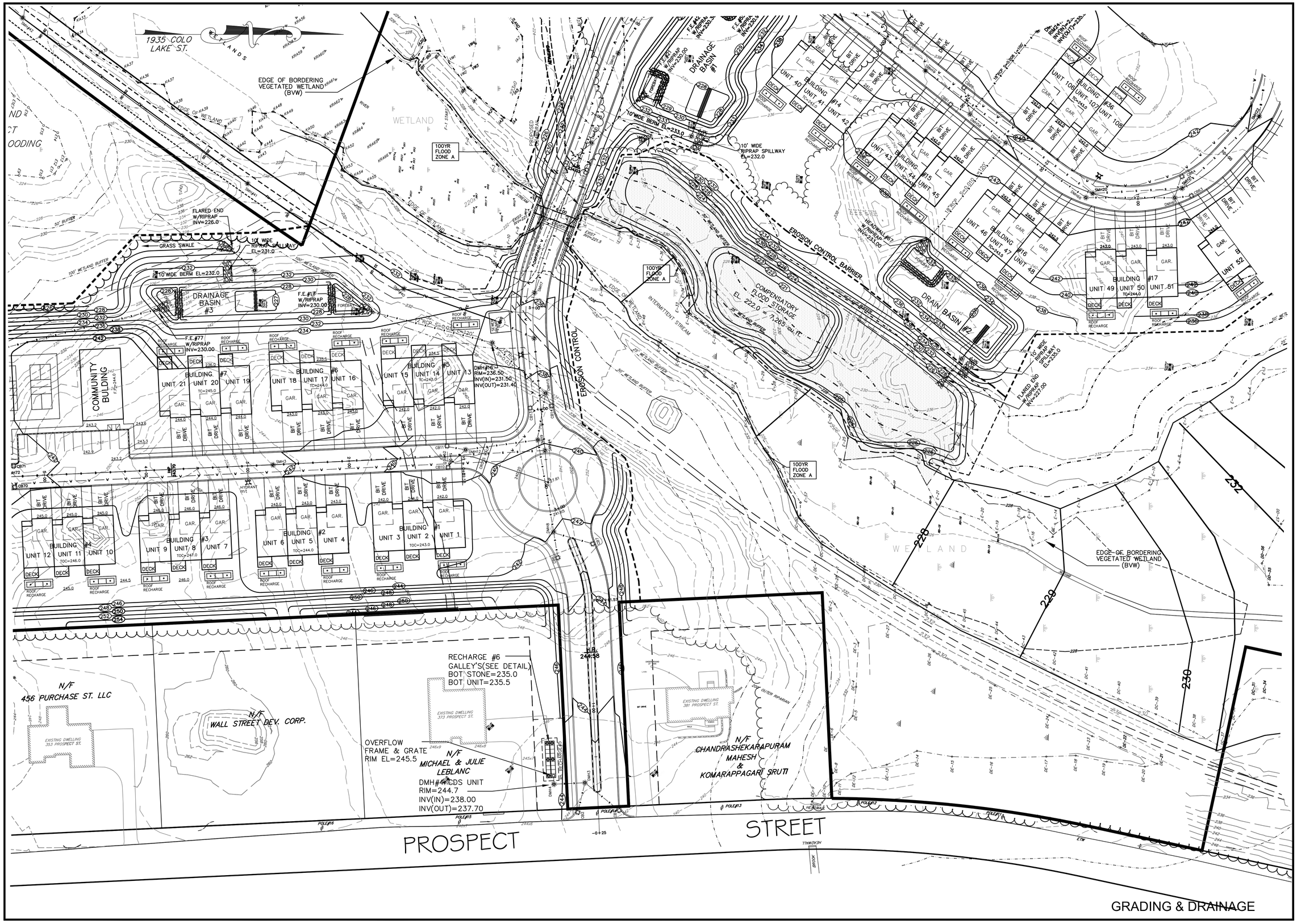

REVISIONS

No.	DATE	DESCRIPTION
1	04/02/2024	WETLAND DELINEATION
2	07/15/2024	PLG BRD ENG COMMENTS
3	09/26/2024	NEW ROAD LAYOUT (LAKE ST)
4	01/30/2025	PLG BRD COMMENTS/129 UNITS
5	04/09/2025	PLG BRD COMMENTS - BSC 3/19/25
6	04/28/2025	PLG BRD COMMENTS

SITE DEVELOPMENT PLAN "PROSPECT HILL VILLAGE" A MULTI-UNIT RESIDENTIAL DEVELOPMENT BELLINGHAM, MASSACHUSETTS

PREPARED FOR:
WALL STREET DEVELOPMENT CORP.
P.O. BOX 272
WESTWOOD, MASSACHUSETTS

GLM Engineering Consultants, Inc.
19 EXCHANGE STREET
HOLLISTON, MA 01746
P: 508-429-1100
F: 508-429-7160
www.GLMengineering.com

JOB No.	16,590
DATE:	NOV. 30, 2023
SCALE:	1"=40'
SHEET:	21 of 43
PLAN #:	27,871

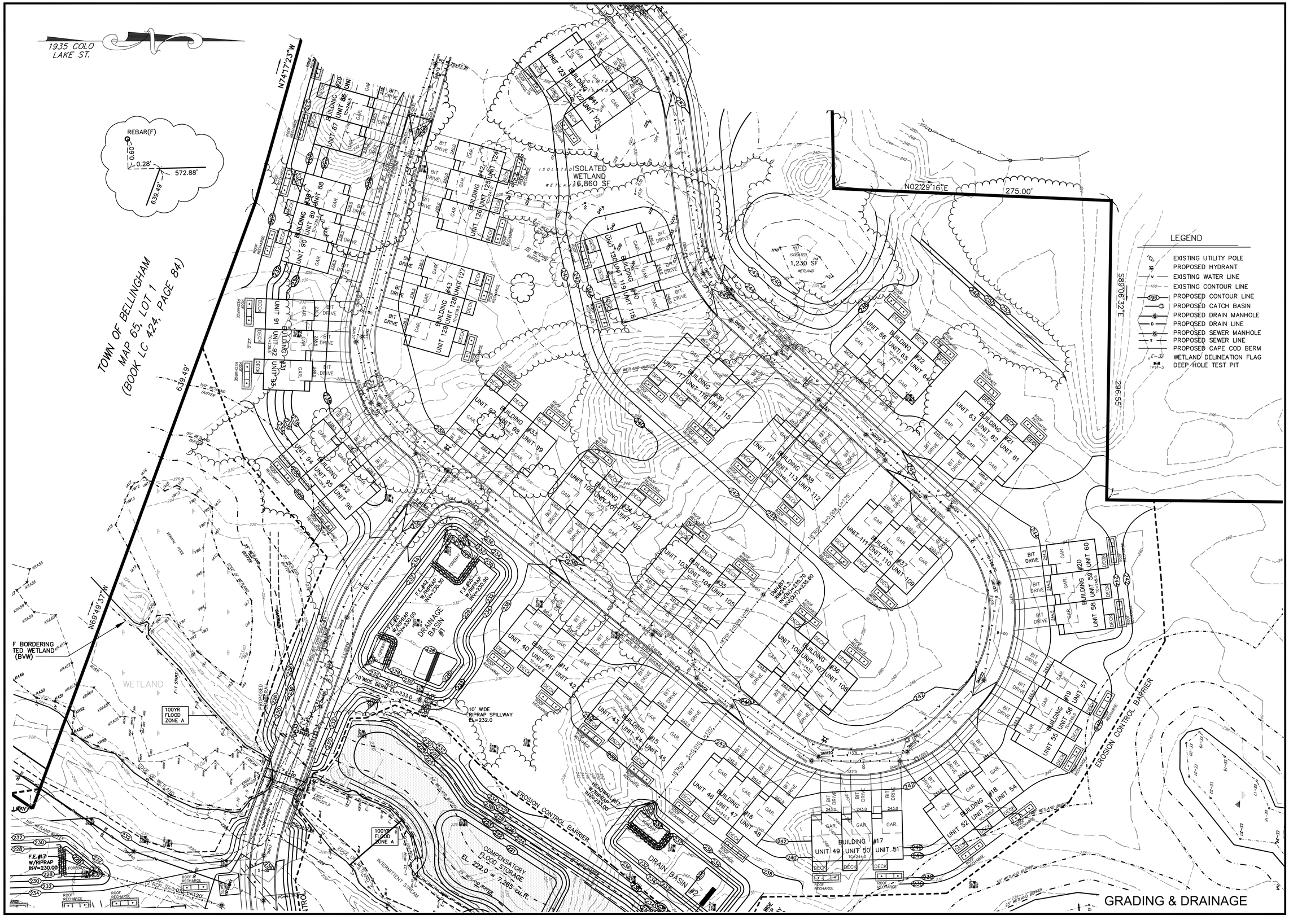

REVISIONS

No.	DATE	DESCRIPTION
1	04/02/2024	WETLAND DELINEATION
2	07/15/2024	PLG BRD ENG COMMENTS
3	09/26/2024	NEW ROAD LAYOUT (LAKE ST)
4	01/30/2025	PLG BRD COMMENTS/129 UNITS
5	04/09/2025	PLG BRD COMMENTS - BSC 3/19/25
6	04/28/2025	PLG BRD COMMENTS

SITE DEVELOPMENT PLAN
"PROSPECT HILL VILLAGE"
A MULTI-UNIT RESIDENTIAL DEVELOPMENT
BELLINGHAM, MASSACHUSETTS

PREPARED FOR:
WALL STREET DEVELOPMENT CORP.
P.O. BOX 272
WESTWOOD, MASSACHUSETTS

GLM Engineering Consultants, Inc.
19 EXCHANGE STREET
HOLLISTON, MA 01746
P: 508-429-1100
F: 508-429-7160
www.GLMengineering.com

JOB No.	16,590
DATE:	NOV. 30, 2023
SCALE:	1"=40'
SHEET:	22 of 43
PLAN #:	27,871

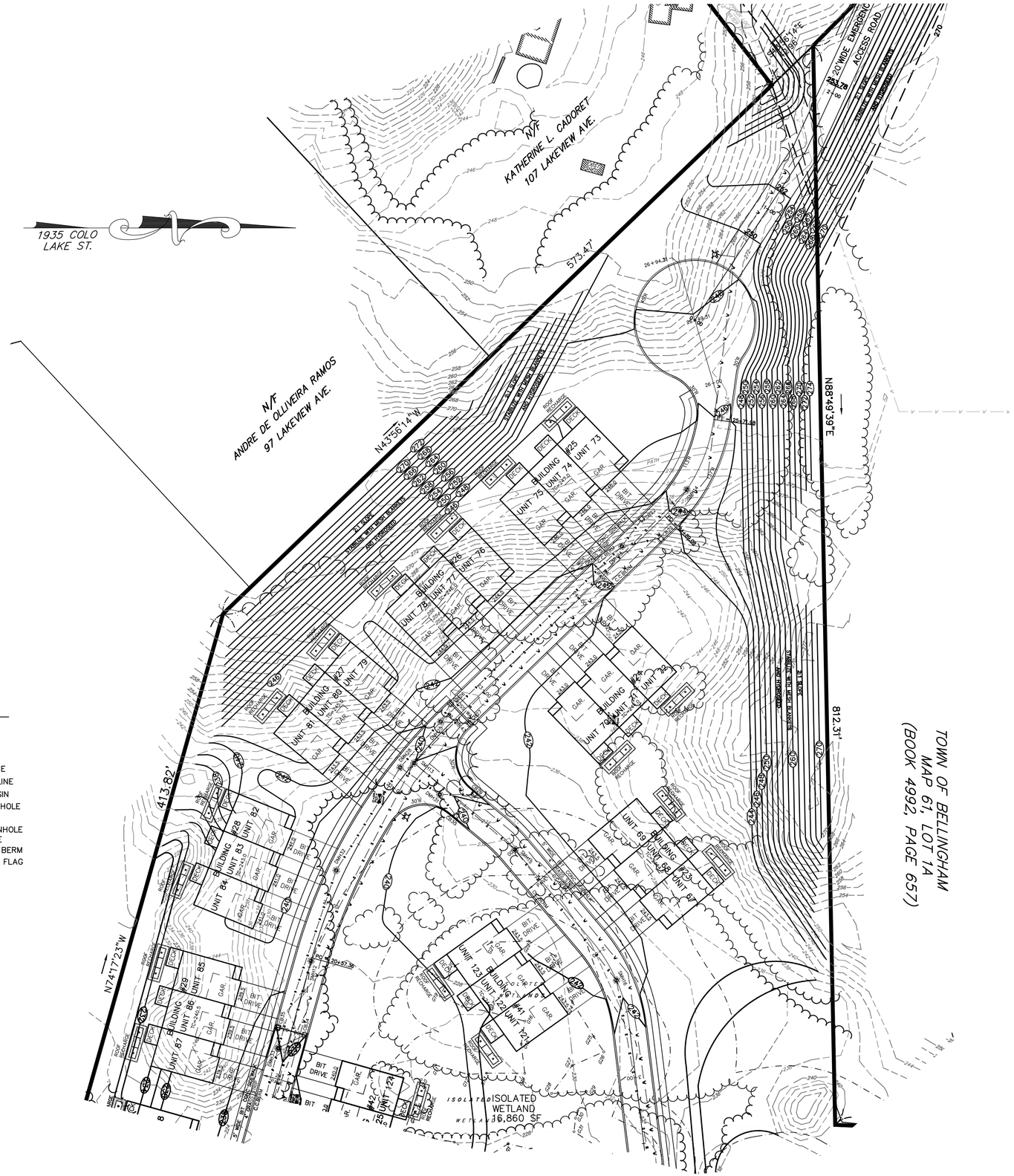

LEGEND

- EXISTING UTILITY POLE
- PROPOSED HYDRANT
- EXISTING WATER LINE
- EXISTING CONTOUR LINE
- PROPOSED CONTOUR LINE
- PROPOSED CATCH BASIN
- PROPOSED DRAIN MANHOLE
- PROPOSED DRAIN LINE
- PROPOSED SEWER MANHOLE
- PROPOSED SEWER LINE
- PROPOSED CAPE COD BERM
- WETLAND DELINEATION FLAG
- DEEP HOLE TEST PIT

GRADING & DRAINAGE

REVISIONS

No.	DATE	DESCRIPTION
1	04/02/2024	WETLAND DELINEATION
2	07/15/2024	PLG BRD ENG COMMENTS
3	09/26/2024	NEW ROAD LAYOUT (LAKE ST)
4	01/30/2025	PLG BRD COMMENTS/129 UNITS
5	04/09/2025	PLG BRD COMMENTS - BSC 3/19/25
6	04/28/2025	PLG BRD COMMENTS

SITE DEVELOPMENT PLAN
"PROSPECT HILL VILLAGE"
A MULTI-UNIT RESIDENTIAL DEVELOPMENT
BELLINGHAM, MASSACHUSETTS

PREPARED FOR:
WALL STREET DEVELOPMENT CORP.
P.O. BOX 272
WESTWOOD, MASSACHUSETTS

GLM Engineering Consultants, Inc.
19 EXCHANGE STREET
HOLLISTON, MA 01746
P: 508-429-1100
F: 508-429-7160
www.GLMengineering.com

JOB No.	16,590
DATE:	NOV. 30, 2023
SCALE:	1"=40'
SHEET:	23 of 43
PLAN #:	27,871

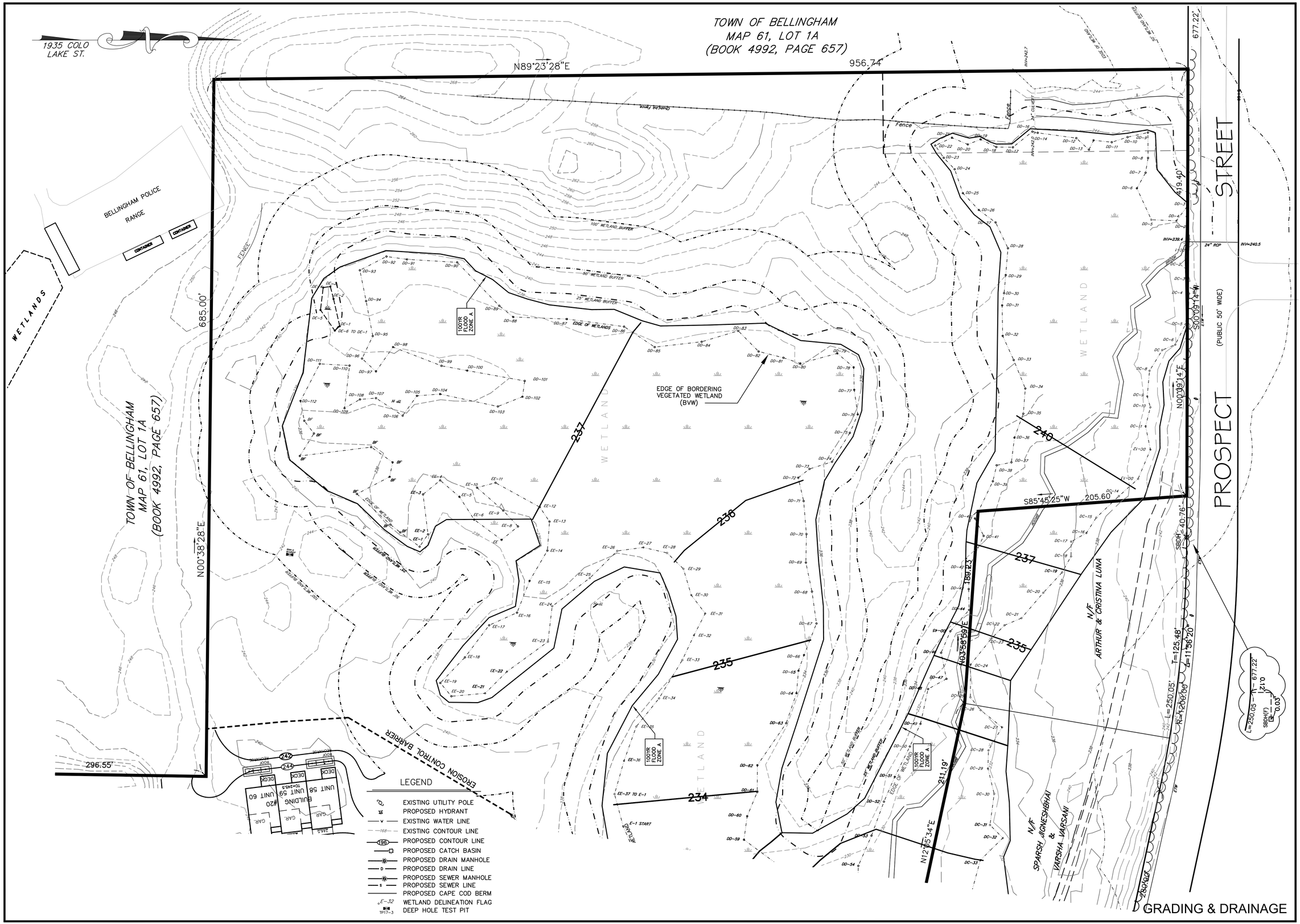

GRADING & DRAINAGE

REVISIONS

No.	DATE	DESCRIPTION
1	04/02/2024	WETLAND DELINEATION
2	07/15/2024	PLG BRD ENG COMMENTS
3	09/26/2024	NEW ROAD LAYOUT (LAKE ST)
4	01/30/2025	PLG BRD COMMENTS/129 UNITS
5	04/09/2025	PLG BRD COMMENTS - BSC 3/19/25
6	04/28/2025	PLG BRD COMMENTS

SITE DEVELOPMENT PLAN
"PROSPECT HILL VILLAGE"
A MULTI-UNIT RESIDENTIAL DEVELOPMENT
BELLINGHAM, MASSACHUSETTS

PREPARED FOR:
WALL STREET DEVELOPMENT CORP.
P.O. BOX 272
WESTWOOD, MASSACHUSETTS

GLM Engineering Consultants, Inc.
19 EXCHANGE STREET
HOLLISTON, MA 01746
P: 508-429-1100
F: 508-429-7160
www.GLMengineering.com

JOB No.	16,590
DATE:	NOV. 30, 2023
SCALE:	1"=40'
SHEET:	24 of 43
PLAN #:	27,871

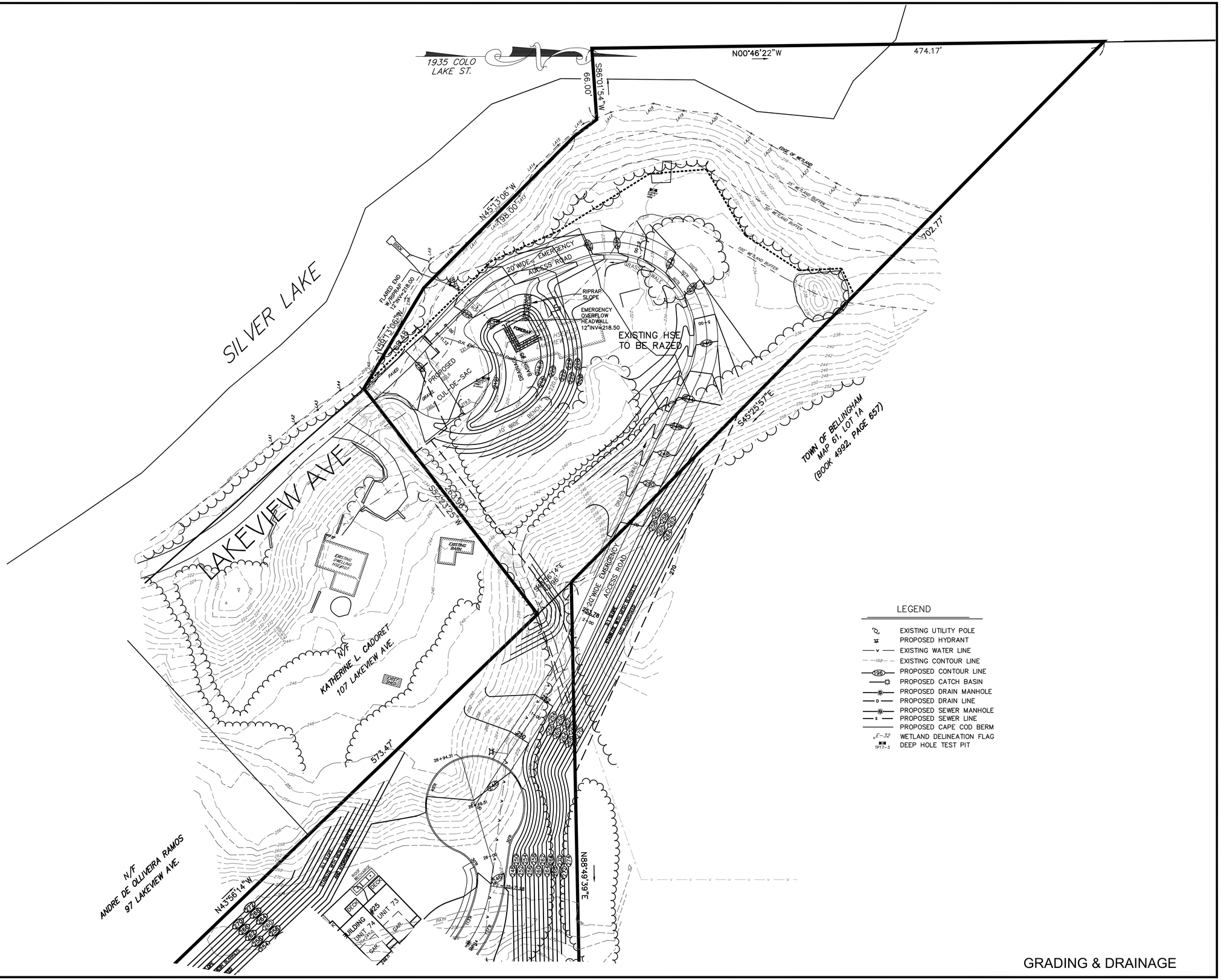

GRADING & DRAINAGE

REVISIONS

No.	DATE	DESCRIPTION
1	04/02/2024	WETLAND DELINEATION
2	07/15/2024	PLG BRD ENG COMMENTS
3	09/26/2024	NEW ROAD LAYOUT (LAKE ST)
4	01/30/2025	PLG BRD COMMENTS/129 UNITS
5	04/09/2025	PLG BRD COMMENTS - BSC 3/19/25
6	04/28/2025	PLG BRD COMMENTS

SITE DEVELOPMENT PLAN "PROSPECT HILL VILLAGE" A MULTI-UNIT RESIDENTIAL DEVELOPMENT BELLINGHAM, MASSACHUSETTS

PREPARED FOR:
WALL STREET DEVELOPMENT CORP.
P.O. BOX 272
WESTWOOD, MASSACHUSETTS

GLM Engineering Consultants, Inc.
19 EXCHANGE STREET
HOLLISTON, MA 01746
P: 508-429-1100
F: 508-429-7160
www.GLMengineering.com

JOB No.	16,590
DATE:	NOV. 30, 2023
SCALE:	1"=40'
SHEET:	25 of 43
PLAN #:	27,871

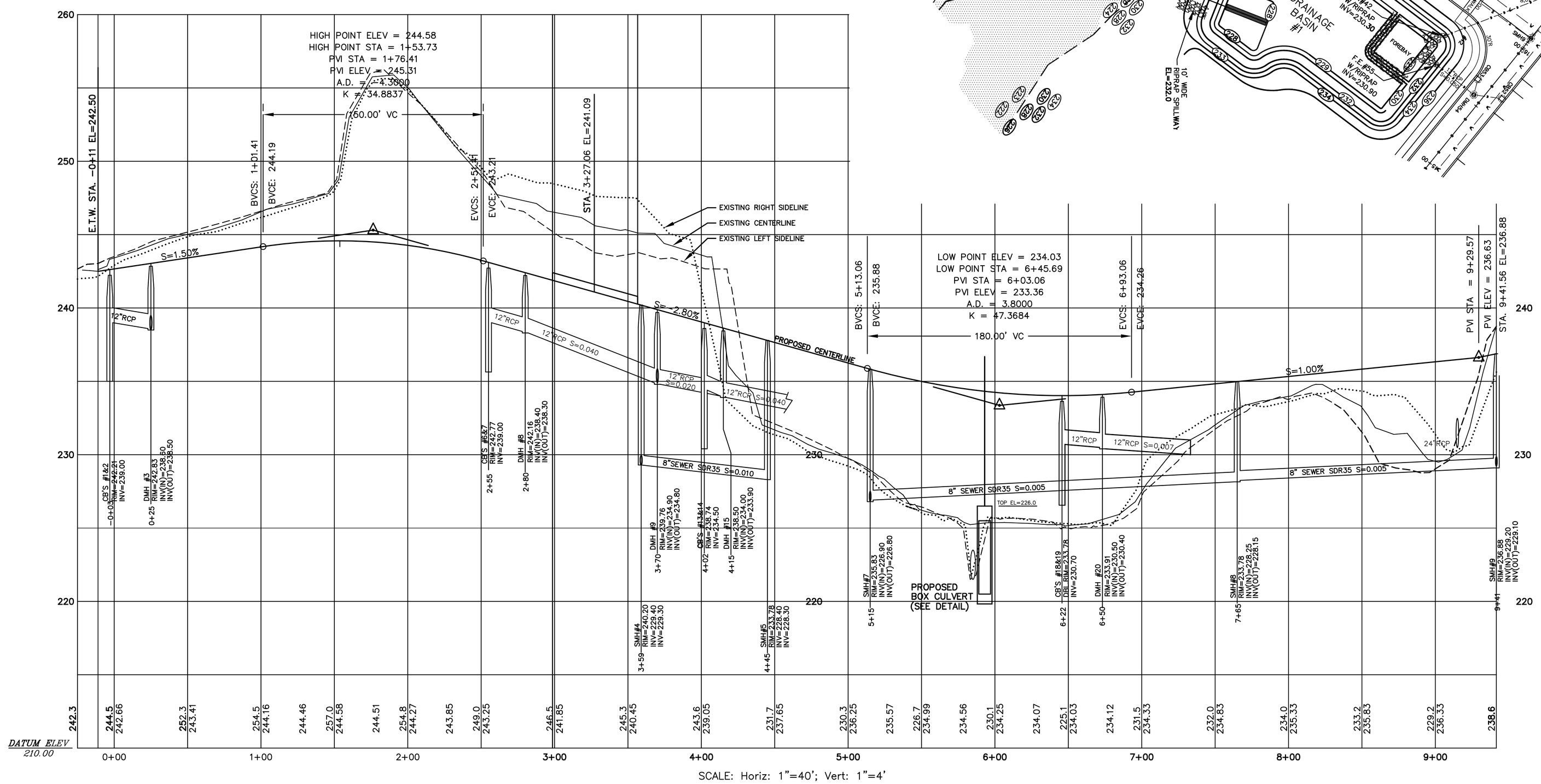

PLAN & PROFILE ROAD A

REVISIONS

No.	DATE	DESCRIPTION
1	04/02/2024	WETLAND DELINEATION
2	07/15/2024	PLG BRD ENG COMMENTS
3	09/26/2024	NEW ROAD LAYOUT (LAKE ST)
4	01/30/2025	PLG BRD COMMENTS/129 UNITS
5	04/09/2025	PLG BRD COMMENTS - BSC 3/19/25
6	04/28/2025	PLG BRD COMMENTS

SITE DEVELOPMENT PLAN "PROSPECT HILL VILLAGE" A MULTI-UNIT RESIDENTIAL DEVELOPMENT BELLINGHAM, MASSACHUSETTS

PREPARED FOR:
WALL STREET DEVELOPMENT CORP.
P.O. BOX 272
WESTWOOD, MASSACHUSETTS

GLM Engineering Consultants, Inc.
19 EXCHANGE STREET
HOLLISTON, MA 01746
P: 508-429-1100
F: 508-429-7160
www.GLMengineering.com

JOB No.	16,590
DATE:	NOV. 30, 2023
SCALE:	1"= 40'
SHEET:	26 of 43
PLAN #:	27,871

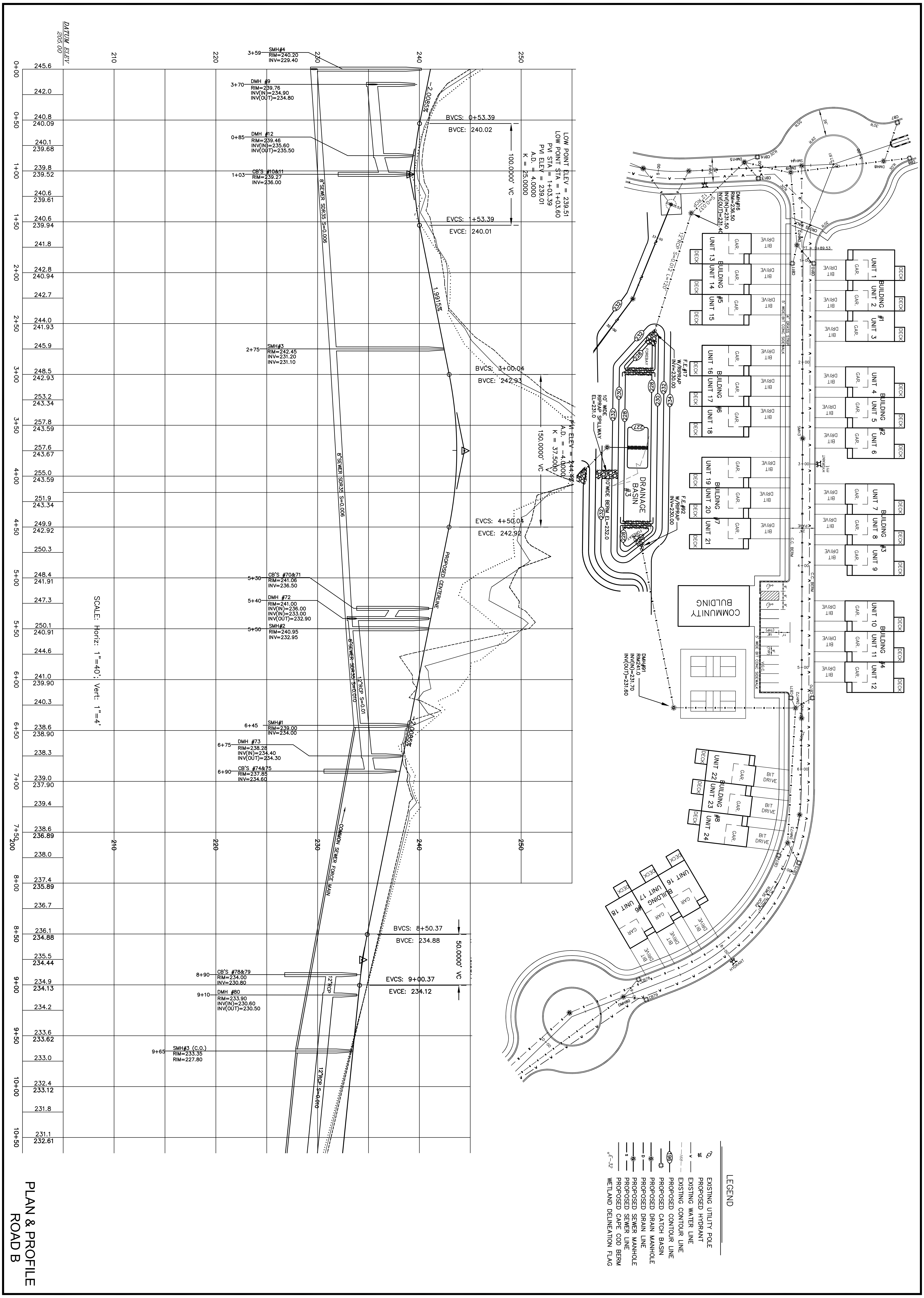

PLAN & PROFILE
ROAD B

GLM Engineering Consultants, Inc.
19 EXCHANGE STREET
HOLLISTON, MA 01746
P:508-429-1100
F:508-429-7160
www.GLMengineering.com

JOB No. 16,590
DATE: NOV. 30, 2023
SCALE: 1"= 40'
SHEET: 27 of 43
PLAN #: 27,871

SITE DEVELOPMENT PLAN
"PROSPECT HILL VILLAGE"
A MULTI-UNIT RESIDENTIAL DEVELOPMENT
BELLINGHAM, MASSACHUSETTS

PREPARED FOR:

WALL STREET DEVELOPMENT CORP.
P.O. BOX 272
WESTWOOD, MASSACHUSETTS

REVISIONS

No.	DATE	DESCRIPTION
1	04/02/2024	WETLAND DELINEATION
2	07/15/2024	PLG BRD ENG COMMENTS
3	09/26/2024	NEW ROAD LAYOUT (LAKE ST)
4	01/30/2025	PLG BRD COMMENTS/129 UNITS
5	04/09/2025	PLG BRD COMMENTS - BSC 3/19/25
6	04/28/2025	PLG BRD COMMENTS

SITE DEVELOPMENT PLAN
"PROSPECT HILL VILLAGE"
A MULTI-UNIT RESIDENTIAL DEVELOPMENT
BELLINGHAM, MASSACHUSETTS

PREPARED FOR:
WALL STREET DEVELOPMENT CORP.
P.O. BOX 272
WESTWOOD, MASSACHUSETTS

GLM Engineering Consultants, Inc.
19 EXCHANGE STREET
HOLLISTON, MA 01746
P: 508-429-1100
F: 508-429-7160
www.GLMengineering.com

JOB No.	16,590
DATE:	NOV. 30, 2023
SCALE:	1"= 40'
SHEET:	28 of 43
PLAN #:	27,871

REVISIONS

No.	DATE	DESCRIPTION
1	04/02/2024	WETLAND DELINEATION
2	07/15/2024	PLG BRD ENG COMMENTS
3	09/26/2024	NEW ROAD LAYOUT (LAKE ST)
4	01/30/2025	PLG BRD COMMENTS/129 UNITS
5	04/09/2025	PLG BRD COMMENTS - BSC 3/19/25
6	04/28/2025	PLG BRD COMMENTS

PLAN & PROFILE
ROAD B

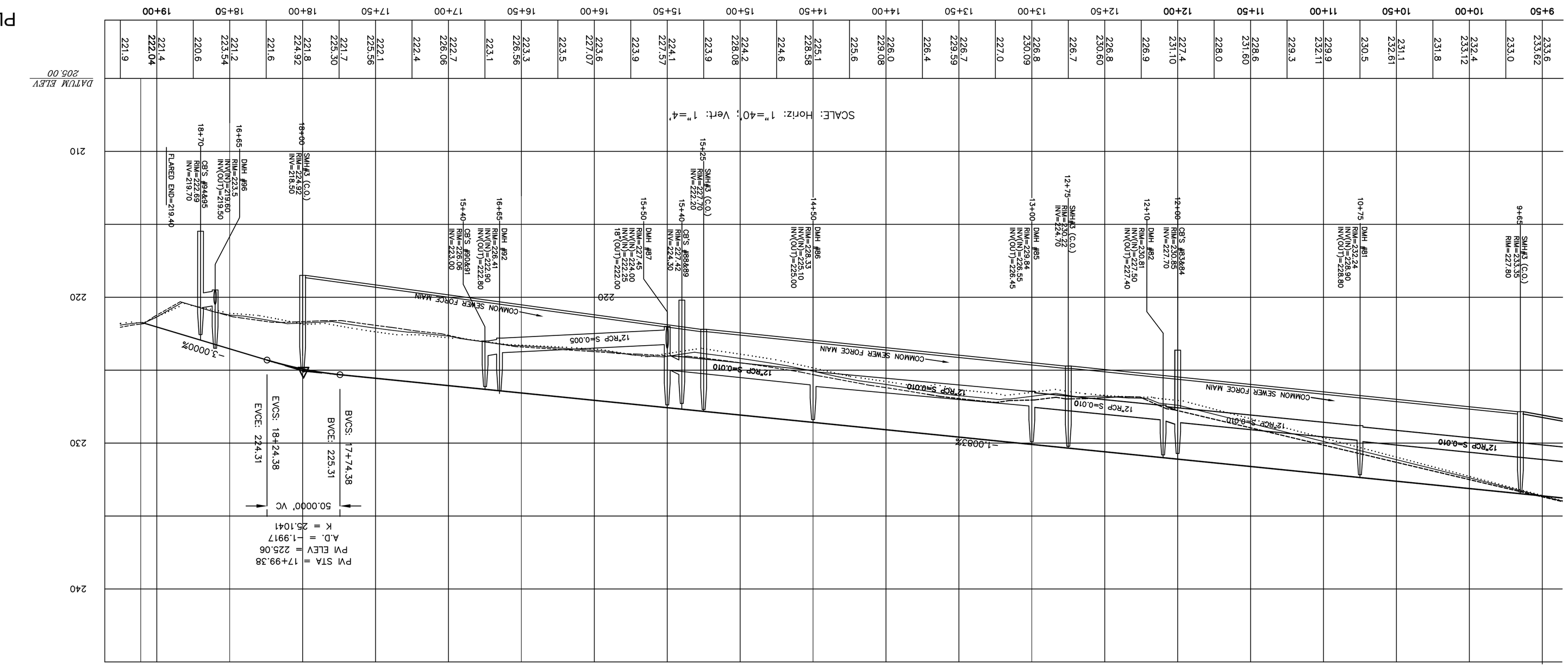

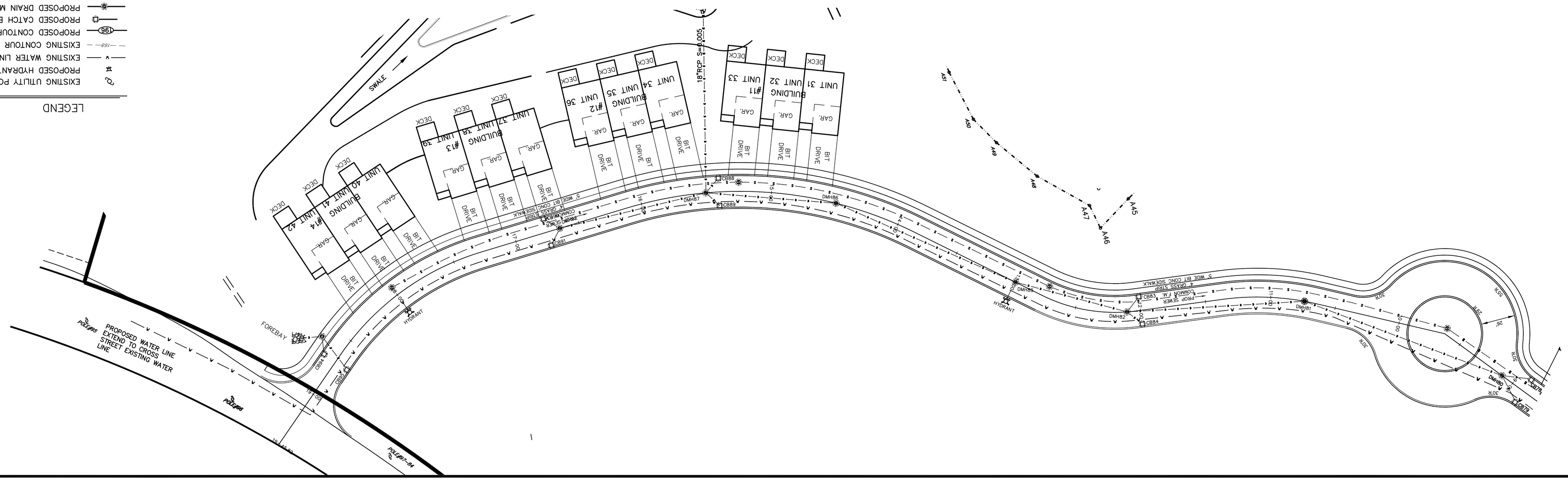

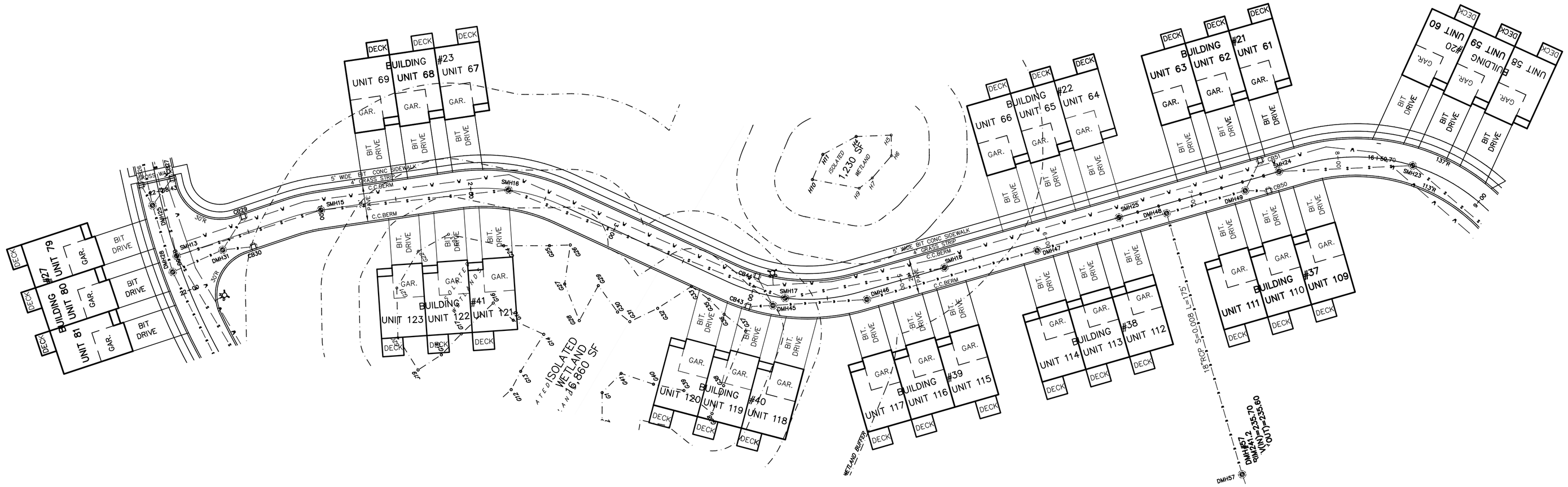

LEGEND

- EXISTING UTILITY POLE
- PROPOSED HYDRANT
- EXISTING WATER LINE
- EXISTING CONTOUR LINE
- PROPOSED CONTOUR LINE
- PROPOSED CATCH BASIN
- PROPOSED DRAIN MANHOLE
- PROPOSED DRAIN LINE
- PROPOSED SEWER MANHOLE
- PROPOSED SEWER LINE
- PROPOSED CAPE COD BERM
- E-32 WETLAND DELINEATION FLAG
- TP17-3 DEEP HOLE TEST PIT

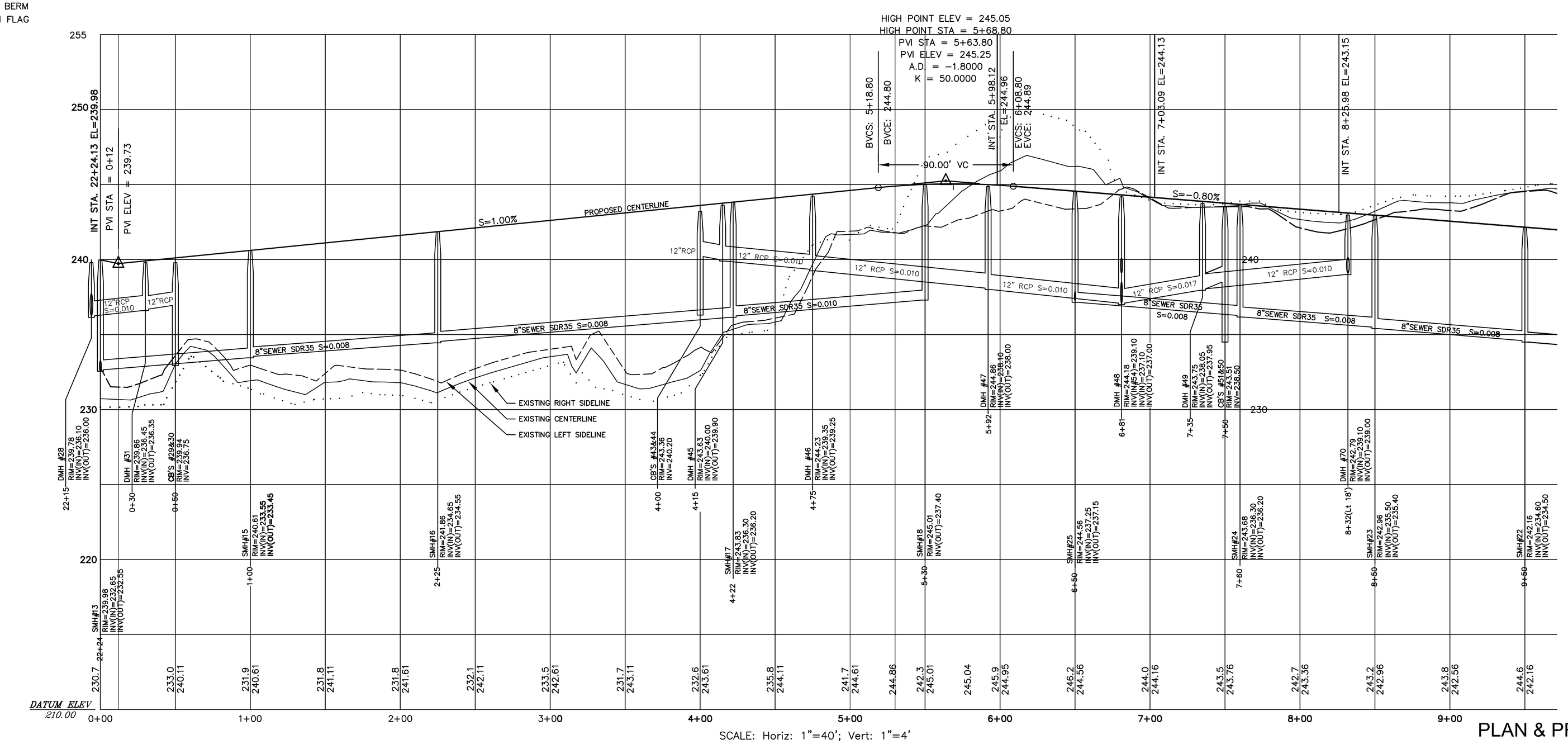

PLAN & PROFILE ROAD C

REVISIONS		
No.	DATE	DESCRIPTION
1	04/02/2024	WETLAND DELINEATION
2	07/15/2024	PLG BRD ENG COMMENTS
3	09/26/2024	NEW ROAD LAYOUT (LAKE ST)
4	01/30/2025	PLG BRD COMMENTS/129 UNITS
5	04/09/2025	PLG BRD COMMENTS - BSC 3/19/25
6	04/28/2025	PLG BRD COMMENTS

SITE DEVELOPMENT PLAN
"PROSPECT HILL VILLAGE"
A MULTI-UNIT RESIDENTIAL DEVELOPMENT
BELLINGHAM, MASSACHUSETTS

PREPARED FOR:
WALL STREET DEVELOPMENT CORP.
P.O. BOX 272
WESTWOOD, MASSACHUSETTS

GLM Engineering Consultants, Inc.
19 EXCHANGE STREET
HOLLISTON, MA 01746
P: 508-429-1100
F: 508-429-7160
www.GLMengineering.com

JOB No.	16,590
DATE:	NOV. 30, 2023
SCALE:	1"= 40'
SHEET:	29 of 43
PLAN #:	27,871

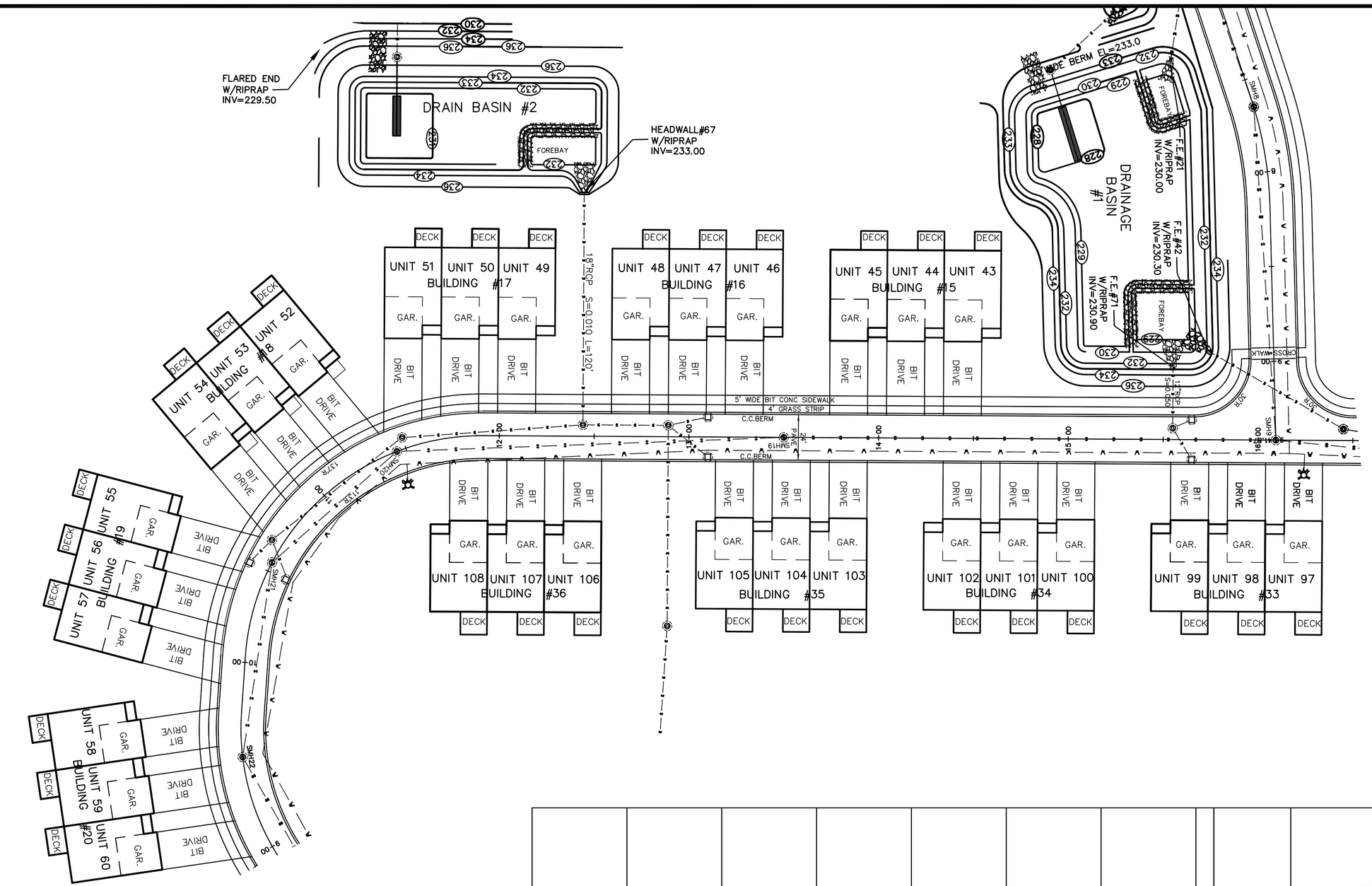

LEGEND

- EXISTING UTILITY POLE
- PROPOSED HYDRANT
- EXISTING WATER LINE
- EXISTING CONTOUR LINE
- PROPOSED CONTOUR LINE
- PROPOSED CATCH BASIN
- PROPOSED DRAIN MANHOLE
- PROPOSED DRAIN LINE
- PROPOSED SEWER MANHOLE
- PROPOSED SEWER LINE
- PROPOSED CAPE COD BERM
- WETLAND DELINEATION FLAG
- DEEP HOLE TEST PIT

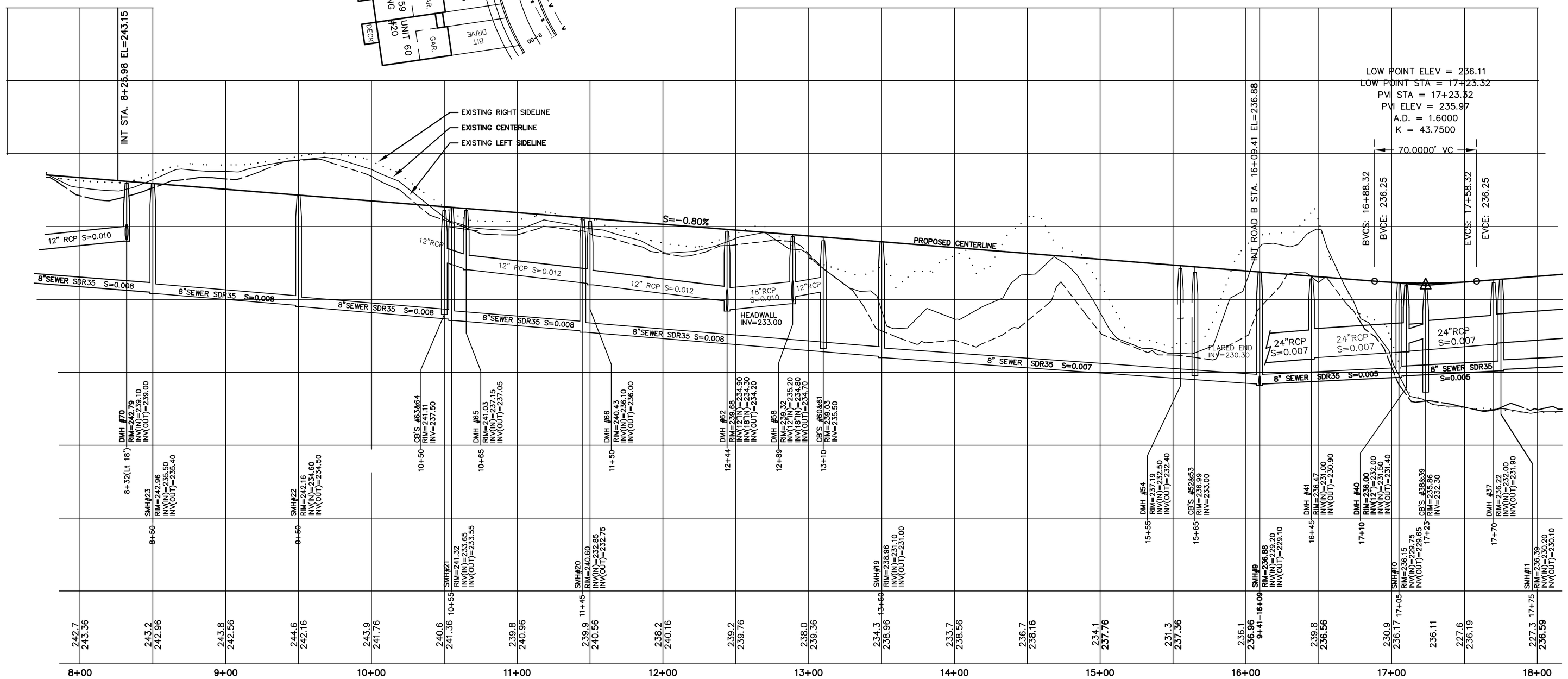

SCALE: Horiz: 1"=40'; Vert: 1"=4'

PLAN & PROFILE ROAD C

REVISIONS

No.	DATE	DESCRIPTION
1	04/02/2024	WETLAND DELINEATION
2	07/15/2024	PLG BRD ENG COMMENTS
3	09/26/2024	NEW ROAD LAYOUT (LAKE ST)
4	01/30/2025	PLG BRD COMMENTS/129 UNITS
5	04/09/2025	PLG BRD COMMENTS - BSC 3/19/25
6	04/28/2025	PLG BRD COMMENTS

SITE DEVELOPMENT PLAN
"PROSPECT HILL VILLAGE"
A MULTI-UNIT RESIDENTIAL DEVELOPMENT
BELLINGHAM, MASSACHUSETTS

PREPARED FOR:
WALL STREET DEVELOPMENT CORP.
P.O. BOX 272
WESTWOOD, MASSACHUSETTS

GLM Engineering Consultants, Inc.
19 EXCHANGE STREET
HOLLISTON, MA 01746
P: 508-429-1100
F: 508-429-7160
www.GLMengineering.com

JOB No.	16,590
DATE:	NOV. 30, 2023
SCALE:	1"= 40'
SHEET:	30 of 43
PLAN #:	27,871

APPROVED BY THE
BELLINGHAM PLANNING BOARD:

_____

_____

_____

_____

_____

DATE APPROVED: _____

I TOWN CLERK OF THE TOWN OF BELLINGHAM RECEIVED AND RECORDED FROM THE PLANNING BOARD APPROVAL OF THIS PLAN AND NO APPEAL HAS BEEN TAKEN FOR TWENTY DAYS NEXT AFTER RECEIPT AND RECORDING OF SAME.

_____ TOWN CLERK _____ DATE

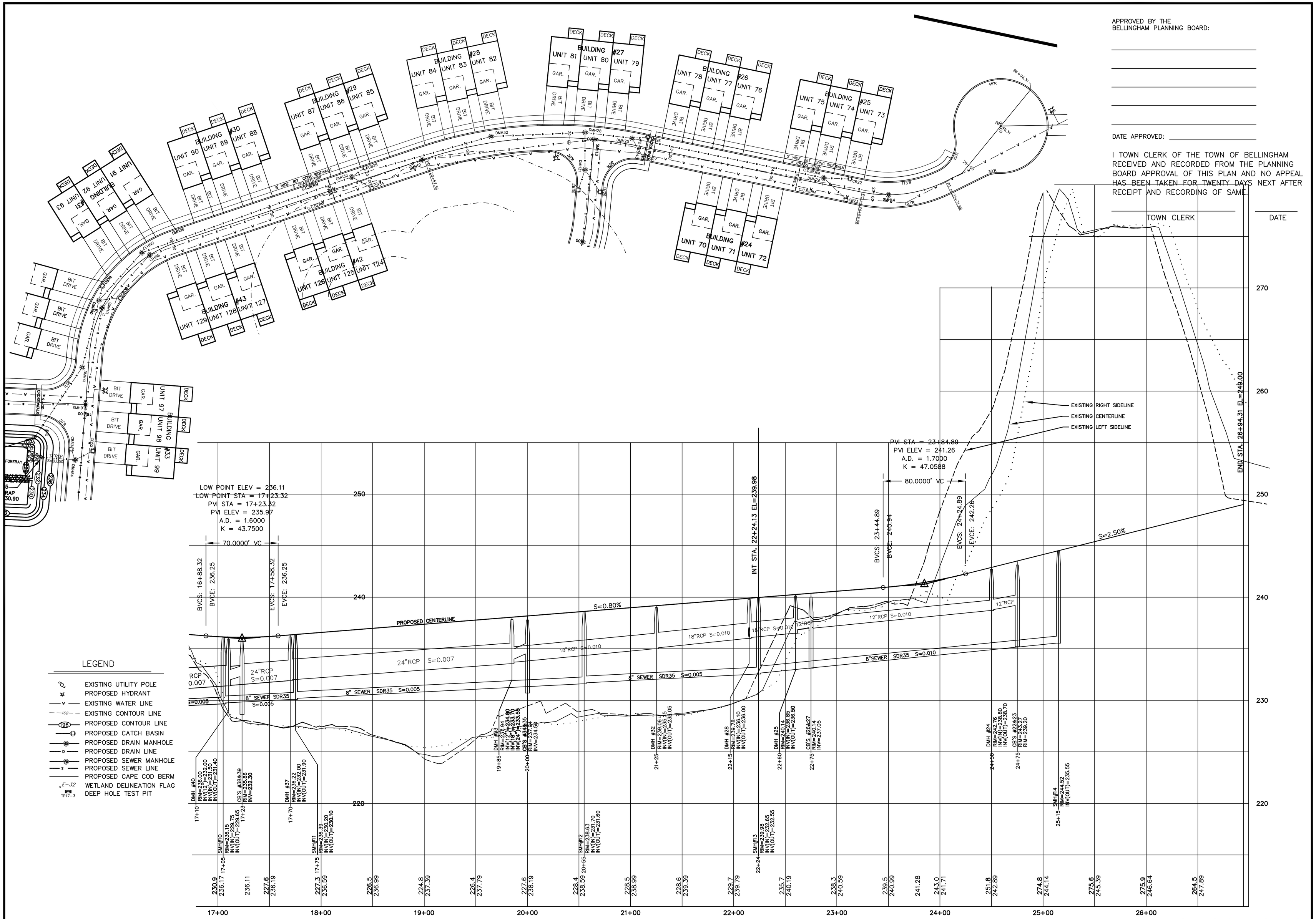

LEGEND

- EXISTING UTILITY POLE
- PROPOSED HYDRANT
- EXISTING WATER LINE
- EXISTING CONTOUR LINE
- PROPOSED CONTOUR LINE
- PROPOSED CATCH BASIN
- PROPOSED DRAIN MANHOLE
- PROPOSED DRAIN LINE
- PROPOSED SEWER MANHOLE
- PROPOSED SEWER LINE
- PROPOSED CAPE COD BERM
- WETLAND DELINEATION FLAG
- DEEP HOLE TEST PIT

PLAN & PROFILE ROAD C

REVISIONS

No.	DATE	DESCRIPTION
1	04/02/2024	WETLAND DELINEATION
2	07/15/2024	PLG BRD ENG COMMENTS
3	09/26/2024	NEW ROAD LAYOUT (LAKE ST)
4	01/30/2025	PLG BRD COMMENTS/129 UNITS
5	04/09/2025	PLG BRD COMMENTS - BSC 3/19/25
6	04/28/2025	PLG BRD COMMENTS

SITE DEVELOPMENT PLAN
"PROSPECT HILL VILLAGE"
A MULTI-UNIT RESIDENTIAL DEVELOPMENT
BELLINGHAM, MASSACHUSETTS

PREPARED FOR:
WALL STREET DEVELOPMENT CORP.
P.O. BOX 272
WESTWOOD, MASSACHUSETTS

GLM Engineering Consultants, Inc.
19 EXCHANGE STREET
HOLLISTON, MA 01746
P: 508-429-1100
F: 508-429-7160
www.GLMengineering.com

JOB No.	16,590
DATE:	NOV. 30, 2023
SCALE:	1"= 40'
SHEET:	31 of 43
PLAN #:	27,871

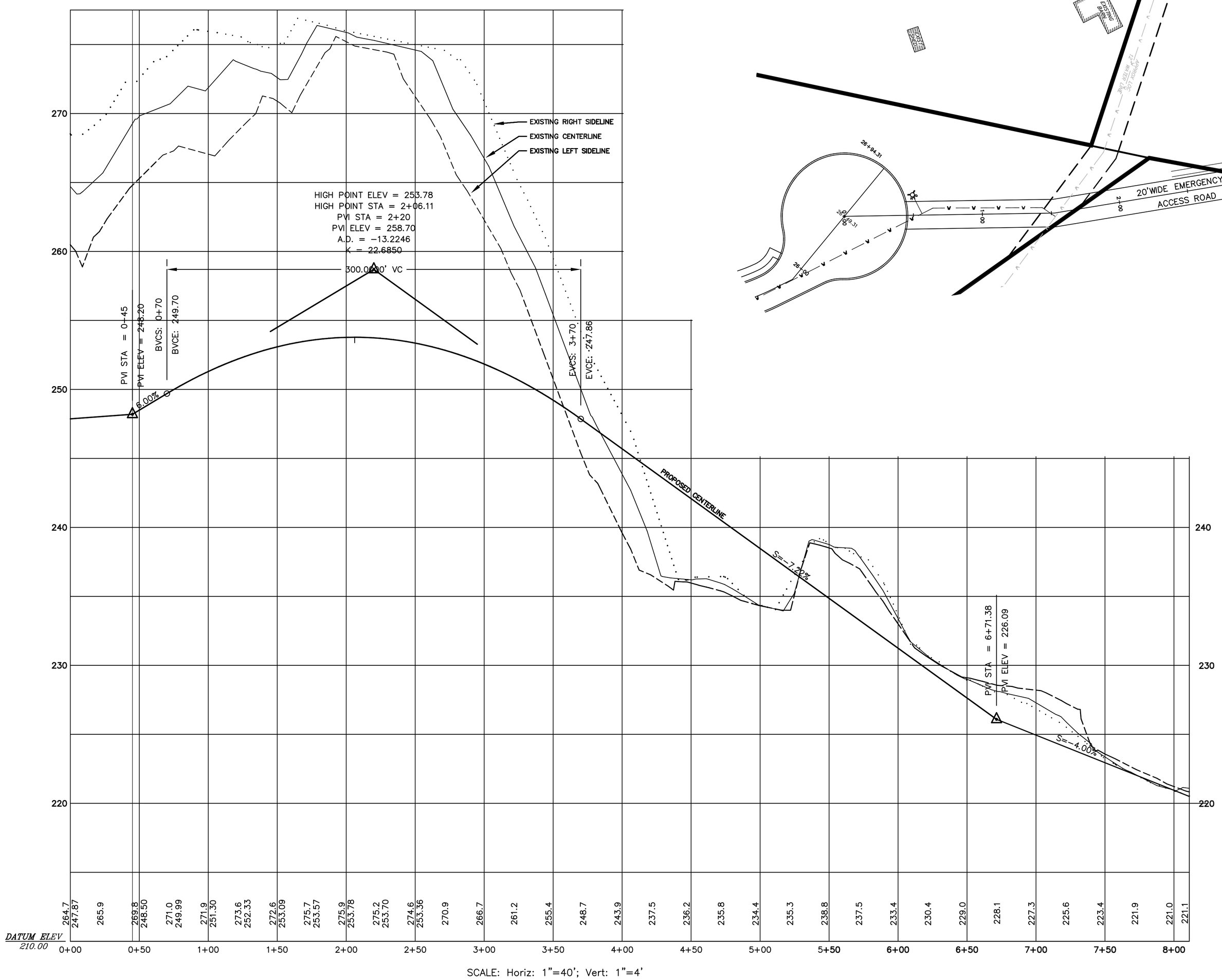

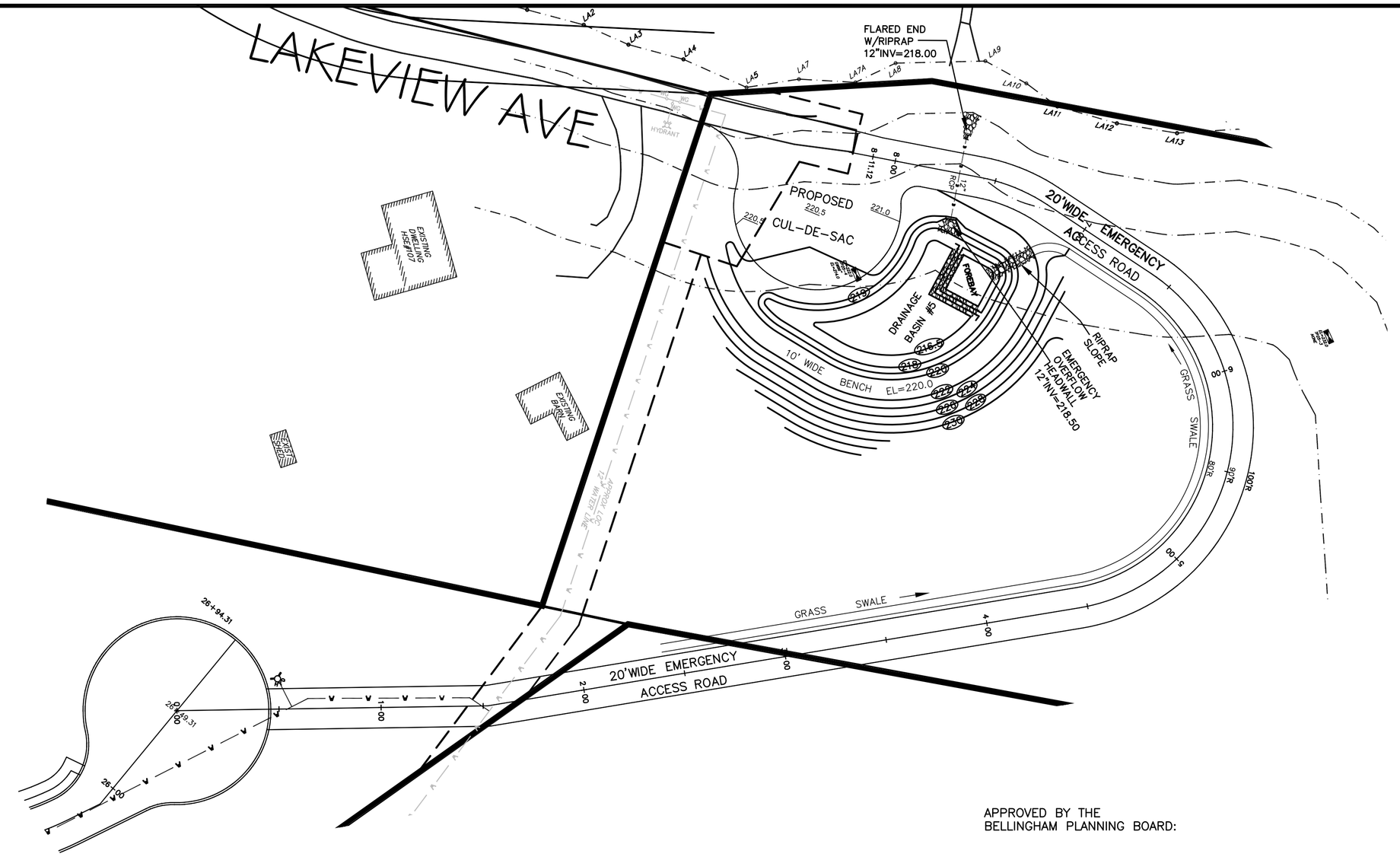

APPROVED BY THE
BELLINGHAM PLANNING BOARD:

DATE APPROVED:

I TOWN CLERK OF THE TOWN OF BELLINGHAM RECEIVED AND RECORDED FROM THE PLANNING BOARD APPROVAL OF THIS PLAN AND NO APPEAL HAS BEEN TAKEN FOR TWENTY DAYS NEXT AFTER RECEIPT AND RECORDING OF SAME.

TOWN CLERK DATE

LEGEND

- EXISTING UTILITY POLE
- PROPOSED HYDRANT
- EXISTING WATER LINE
- EXISTING CONTOUR LINE
- PROPOSED CONTOUR LINE
- PROPOSED CATCH BASIN
- PROPOSED DRAIN MANHOLE
- PROPOSED DRAIN LINE
- PROPOSED SEWER MANHOLE
- PROPOSED SEWER LINE
- PROPOSED CAPE COD BERM
- WETLAND DELINEATION FLAG
- DEEP HOLE TEST PIT

PLAN & PROFILE ROAD F

REVISIONS

No.	DATE	DESCRIPTION
1	04/02/2024	WETLAND DELINEATION
2	07/15/2024	PLG BRD ENG COMMENTS
3	09/26/2024	NEW ROAD LAYOUT (LAKE ST)
4	01/30/2025	PLG BRD COMMENTS/129 UNITS
5	04/09/2025	PLG BRD COMMENTS - BSC 3/19/25
6	04/28/2025	PLG BRD COMMENTS

SITE DEVELOPMENT PLAN
"PROSPECT HILL VILLAGE"
A MULTI-UNIT RESIDENTIAL DEVELOPMENT
BELLINGHAM, MASSACHUSETTS

PREPARED FOR:
WALL STREET DEVELOPMENT CORP.
P.O. BOX 272
WESTWOOD, MASSACHUSETTS

GLM Engineering Consultants, Inc.
19 EXCHANGE STREET
HOLLISTON, MA 01746
P: 508-429-1100
F: 508-429-7160
www.GLMengineering.com

JOB No.	16,590
DATE:	NOV. 30, 2023
SCALE:	1"= 40'
SHEET:	32 of 43
PLAN #:	27,871

APPROVED BY THE
BELLINGHAM PLANNING BOARD:

_____

_____

_____

_____

_____

DATE APPROVED: _____

I TOWN CLERK OF THE TOWN OF BELLINGHAM RECEIVED AND RECORDED FROM THE PLANNING BOARD APPROVAL OF THIS PLAN AND NO APPEAL HAS BEEN TAKEN FOR TWENTY DAYS NEXT AFTER RECEIPT AND RECORDING OF SAME.

_____ _____
TOWN CLERK DATE

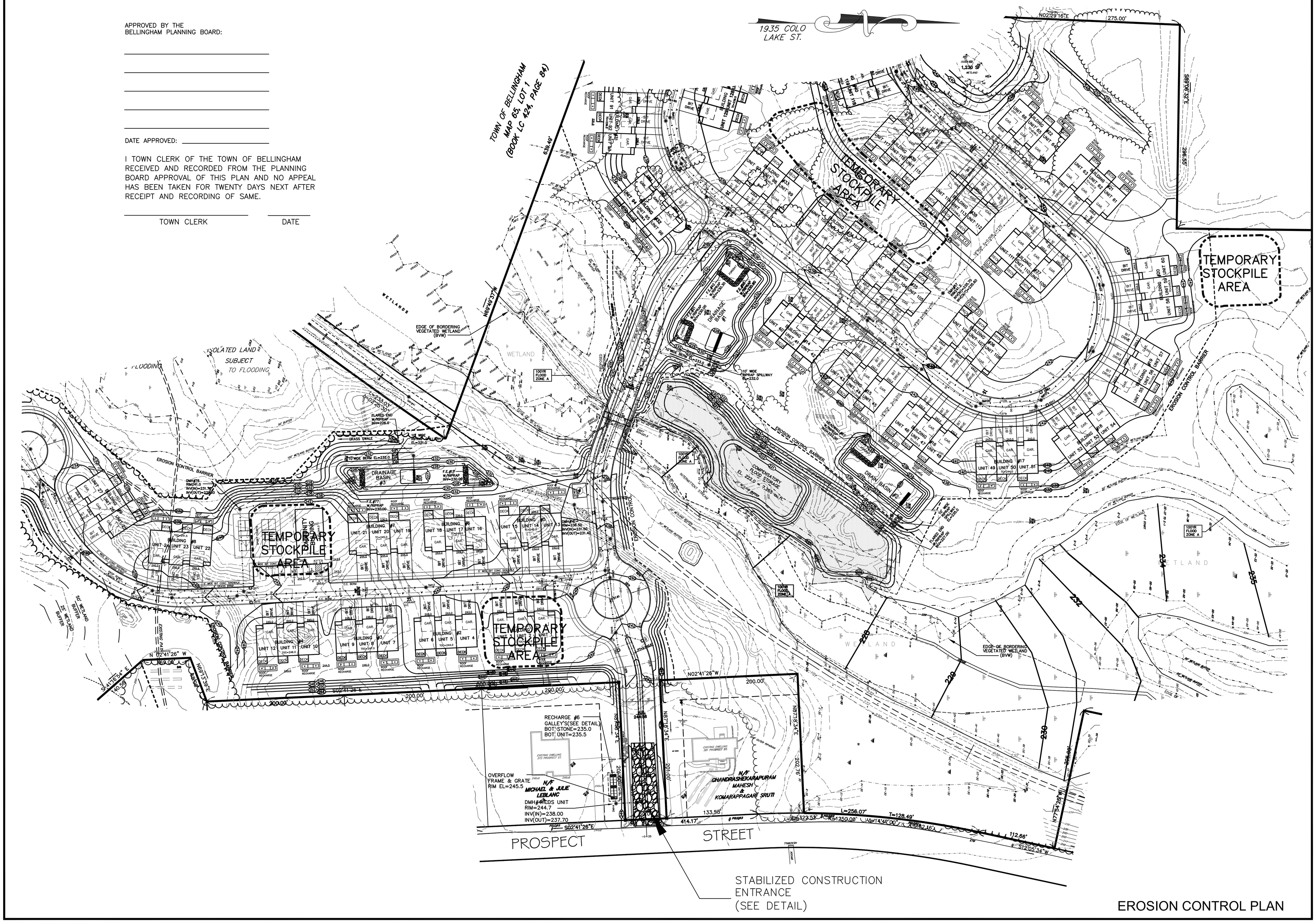

EROSION CONTROL PLAN

REVISIONS		
No.	DATE	DESCRIPTION
1	04/02/2024	WETLAND DELINEATION
2	07/15/2024	PLG BRD ENG COMMENTS
3	09/26/2024	NEW ROAD LAYOUT (LAKE ST)
4	01/30/2025	PLG BRD COMMENTS/129 UNITS
5	04/09/2025	PLG BRD COMMENTS - BSC 3/19/25
6	04/28/2025	PLG BRD COMMENTS

SITE DEVELOPMENT PLAN "PROSPECT HILL VILLAGE" A MULTI-UNIT RESIDENTIAL DEVELOPMENT BELLINGHAM, MASSACHUSETTS

PREPARED FOR:
WALL STREET DEVELOPMENT CORP.
P.O. BOX 272
WESTWOOD, MASSACHUSETTS

GLM Engineering Consultants, Inc.
19 EXCHANGE STREET
HOLLISTON, MA 01746
P: 508-429-1100
F: 508-429-7160
www.GLMengineering.com

JOB No.	16,590
DATE:	NOV. 30, 2023
SCALE:	1"=60'
SHEET:	33 of 43
PLAN #:	27,871

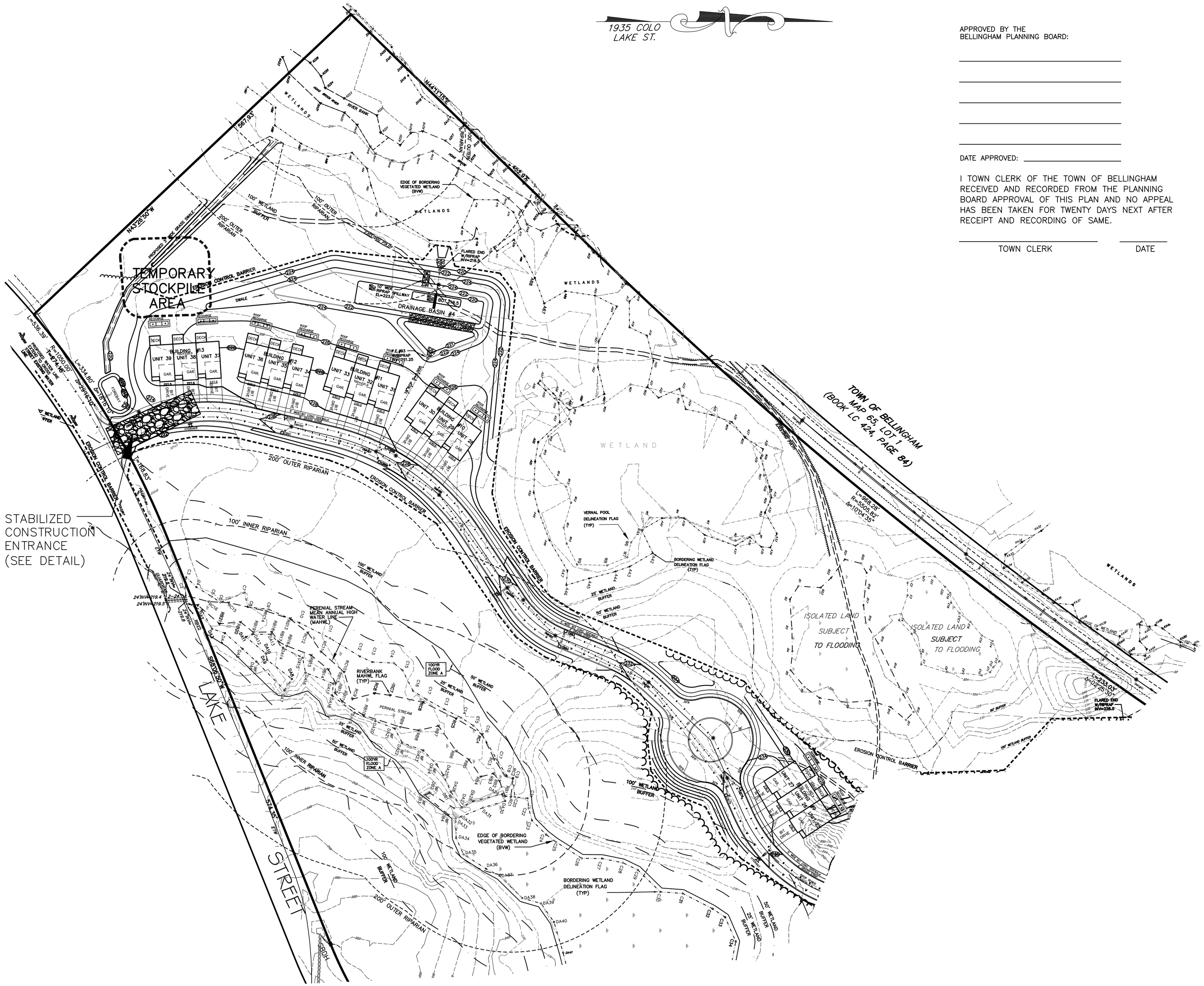

APPROVED BY THE
BELLINGHAM PLANNING BOARD:

DATE APPROVED: _____

I TOWN CLERK OF THE TOWN OF BELLINGHAM RECEIVED AND RECORDED FROM THE PLANNING BOARD APPROVAL OF THIS PLAN AND NO APPEAL HAS BEEN TAKEN FOR TWENTY DAYS NEXT AFTER RECEIPT AND RECORDING OF SAME.

TOWN CLERK _____ DATE _____

REVISIONS

No.	DATE	DESCRIPTION
1	04/02/2024	WETLAND DELINEATION
2	07/15/2024	PLG BRD ENG COMMENTS
3	09/26/2024	NEW ROAD LAYOUT (LAKE ST)
4	01/30/2025	PLG BRD COMMENTS/129 UNITS
5	04/09/2025	PLG BRD COMMENTS - BSC 3/19/25
6	04/28/2025	PLG BRD COMMENTS

SITE DEVELOPMENT PLAN
"PROSPECT HILL VILLAGE"
A MULTI-UNIT RESIDENTIAL DEVELOPMENT
BELLINGHAM, MASSACHUSETTS

PREPARED FOR:
WALL STREET DEVELOPMENT CORP.
P.O. BOX 272
WESTWOOD, MASSACHUSETTS

GLM Engineering Consultants, Inc.
19 EXCHANGE STREET
HOLLISTON, MA 01746
P: 508-429-1100
F: 508-429-7160
www.GLMengineering.com

JOB No.	16,590
DATE:	NOV. 30, 2023
SCALE:	1"=60'
SHEET:	34 of 43
PLAN #:	27,871

EROSION CONTROL PLAN

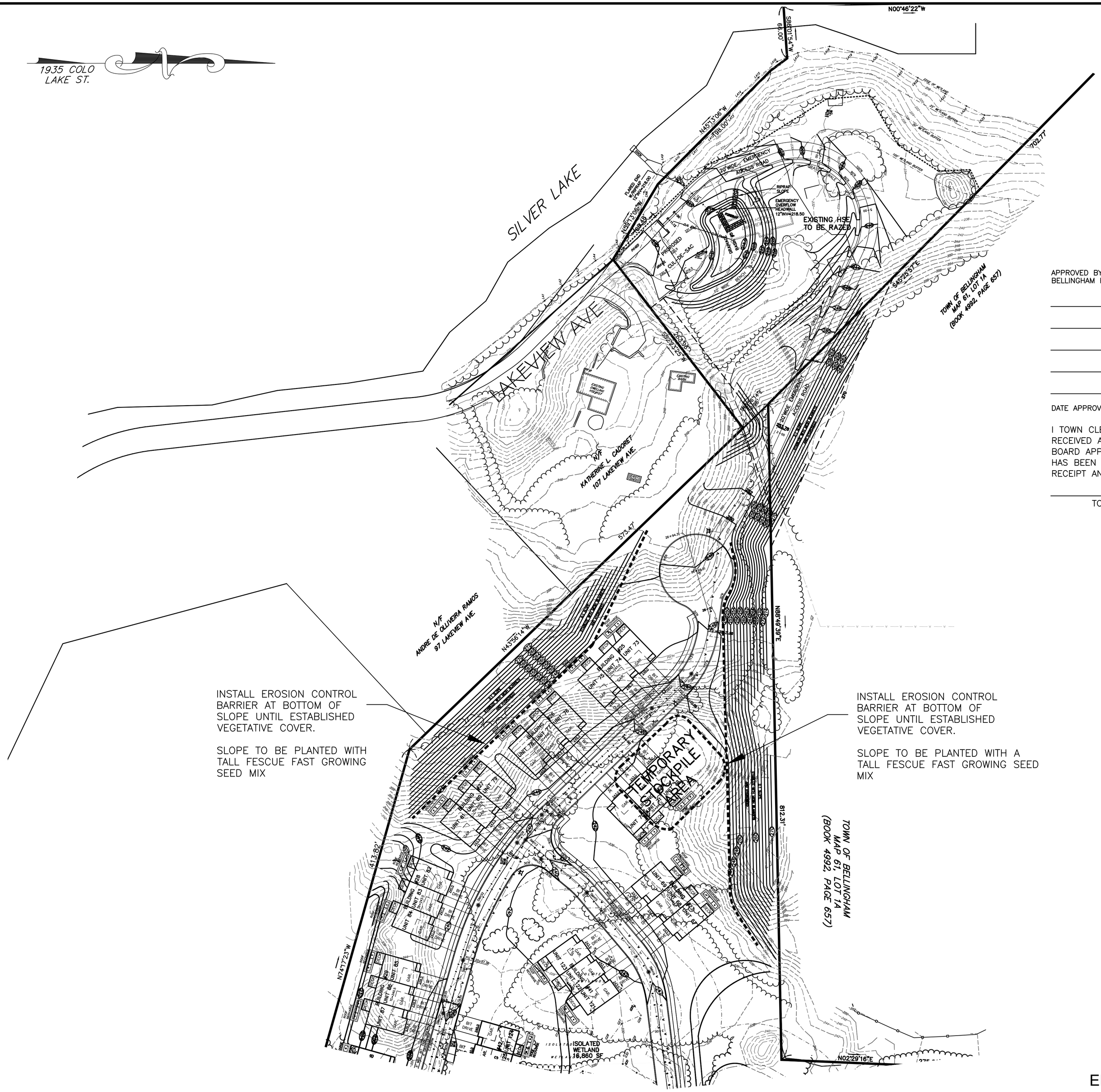

INSTALL EROSION CONTROL BARRIER AT BOTTOM OF SLOPE UNTIL ESTABLISHED VEGETATIVE COVER.

SLOPE TO BE PLANTED WITH TALL FESCUE FAST GROWING SEED MIX

INSTALL EROSION CONTROL BARRIER AT BOTTOM OF SLOPE UNTIL ESTABLISHED VEGETATIVE COVER.

SLOPE TO BE PLANTED WITH A TALL FESCUE FAST GROWING SEED MIX

APPROVED BY THE BELLINGHAM PLANNING BOARD:

_____

_____

_____

_____

_____

DATE APPROVED: _____

I TOWN CLERK OF THE TOWN OF BELLINGHAM RECEIVED AND RECORDED FROM THE PLANNING BOARD APPROVAL OF THIS PLAN AND NO APPEAL HAS BEEN TAKEN FOR TWENTY DAYS NEXT AFTER RECEIPT AND RECORDING OF SAME.

_____ _____

TOWN CLERK DATE

EROSION CONTROL PLAN

REVISIONS

No.	DATE	DESCRIPTION
1	04/02/2024	WETLAND DELINEATION
2	07/15/2024	PLG BRD ENG COMMENTS
3	09/26/2024	NEW ROAD LAYOUT (LAKE ST)
4	01/30/2025	PLG BRD COMMENTS/129 UNITS
5	04/09/2025	PLG BRD COMMENTS - BSC 3/19/25
6	04/28/2025	PLG BRD COMMENTS

SITE DEVELOPMENT PLAN
"PROSPECT HILL VILLAGE"
A MULTI-UNIT RESIDENTIAL DEVELOPMENT
BELLINGHAM, MASSACHUSETTS

PREPARED FOR:
WALL STREET DEVELOPMENT CORP.
P.O. BOX 272
WESTWOOD, MASSACHUSETTS

GLM Engineering Consultants, Inc.
19 EXCHANGE STREET
HOLLISTON, MA 01746
P: 508-429-1100
F: 508-429-7160
www.GLMengineering.com

JOB No.	16,590
DATE:	NOV. 30, 2023
SCALE:	1"=60'
SHEET:	35 of 43
PLAN #:	27,871

EROSION AND SEDIMENTATION CONTROL:

1. PRIOR TO ANY DISTURBANCE OR ALTERATIONS ON ANY AREA ON THE SITE. THE FILTER MITT SEDIMENT BARRIER SHALL BE INSTALLED IN THE LOCATIONS SHOWN ON THE SITE PLAN.

2. BARRIERS SHALL BE CONSTRUCTED AS SHOWN ON THE FILTER MITT DETAIL.

3. ONCE INSTALLED, THE FILTER MITT SEDIMENT BARRIERS SHALL BE MAINTAINED IN PLACE UNTIL ALL AREAS UPGRADIENT FROM THE BARRIERS HAVE BEEN STABILIZED AS SPECIFIED HEREIN. UPON COMPLETION AND STABILIZATION OF THE PROJECT, THE FILTER MITT SHALL BE REMOVED.

4. THE EROSION BARRIER IS INTENDED TO ACT AS A LIMIT OF DISTURBANCE. ANY LAND DOWN GRADIENT FROM THE FENCE ACCIDENTALLY DISTURBED SHALL BE IMMEDIATELY REPAIRED AND RESTORED TO ORIGINAL CONDITION.

5. EROSION CONTROL MEASURES SHALL BE MONITORED ON A DAILY BASIS, OR AS NEEDED, AND BE REINFORCED, REPAIRED, OR REPLACED WHEN NEEDED, PER JUDGEMENT OF THE SITE FOREMAN AND/OR TOWN OF BELLINGHAM REPRESENTATIVE.

6. TEMPORARY VEGETATION COVER SHALL BE ESTABLISHED ON ALL DISTURBED AREAS WHERE CONSTRUCTION ACTIVITIES TEMPORARILY CEASE FOR AT LEAST 30 DAYS. AREAS SHALL BE STABILIZED WITH TEMPORARY SEED. IF THE SEASON PREVENTS THE ESTABLISHMENT OF A VEGETATIVE COVER, DISTURBED AREAS SHALL BE MULCHED AND THEN SEEDED WHEN WEATHER CONDITIONS ALLOW.

7. THE FIRST ONE-HUNDRED FIFTY (100) FEET OF THE PROPOSED ENTRANCE AT PROSPECT STREET SHALL HAVE A CONSTRUCTION ENTRANCE PAD(SEE DETAIL).

8. WATER SPRAYING SHALL BE UTILIZED ON ALL DISTURBED AREAS DURING DRY WEATHER TO PREVENT DUST. A WATER TRUCK SHALL BE KEPT ON SITE AT ALL TIMES DURING THE DURING THE SUMMER MONTHS OF CONSTRUCTION.

9. FOLLOWING CONSTRUCTION OF THE CATCH BASIN STRUCTURES, A SILTATION BARRIER SHALL BE SET AROUND THE INLET FOR EACH STRUCTURE TO PREVENT SEDIMENT FROM ENTERING THE DRAINAGE SYSTEM. (SEE DETAIL)

10. NO SLOPES, EITHER TEMPORARY OR PERMANT SHALL BE STEEPER THAN TWO TO 1 (2:1).

11. STREET SWEEPING SHALL BE DONE AS NEEDED BASIS ALONG PROSPECT STREET TO THE LIMITS OF SEDIMENT TRACKING.

12. STOCKPILE MATERIAL SHALL BE SECURED AROUND THE PERIMETER WITH EROSION CONTROL BARRIERS.

MAINTENANCE:

1. THE CONTRACTOR SHALL HAVE ON SITE AN ADEQUATE QUANTITY OF SUPPLEMENTAL HAYBALES AND/OR SILT SOCK TO BE USED FOR CONTROL OF EMERGENCY EROSION PROBLEMS.

2. ALL EROSION CONTROL MEASURES SHALL BE INSPECTED WEEKLY.

3. THE CONTRACTOR SHALL MONITOR DAILY WEATHER AND PRIOR TO ANY PREDICTED RAIN STORM, THE EROSION BARRIERS SHALL BE INSPECTED AND NEW ONES SUPPLEMENTED IN ANY AREAS OF POSSIBLE CONCENTRATED RUNOFF.

4. SEDIMENT CHECK DAMS MAY BE INSTALLED IN AREA OF HIGH CONCENTRATION OF SURFACE RUNOFF.(SEE DETAIL)

5. ALL EQUIPMENT SHALL BE STORED IN THE DESIGNATED STAGING AREA.

A MORE DETAILED SEDIMENT AND EROSION CONTROL PLAN WILL BE DEVELOPED AS PART OF THE NPDES STORMWATER POLLUTION PREVENTION PLAN.

APPROVED BY THE
BELLINGHAM PLANNING BOARD:

_____

_____

_____

_____

_____

DATE APPROVED: _____

I TOWN CLERK OF THE TOWN OF BELLINGHAM RECEIVED AND RECORDED FROM THE PLANNING BOARD APPROVAL OF THIS PLAN AND NO APPEAL HAS BEEN TAKEN FOR TWENTY DAYS NEXT AFTER RECEIPT AND RECORDING OF SAME.

_____ _____
TOWN CLERK DATE

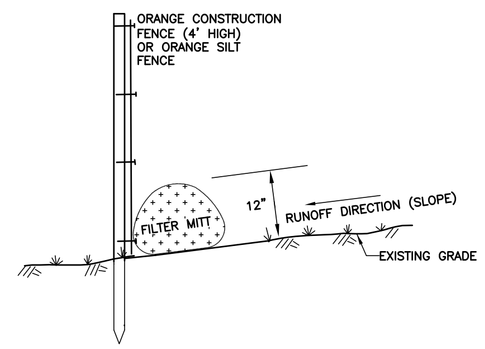

EROSION CONTROL BARRIER
FILTER MITT W/
CONSTRUCTION FENCE DETAIL
N.T.S.

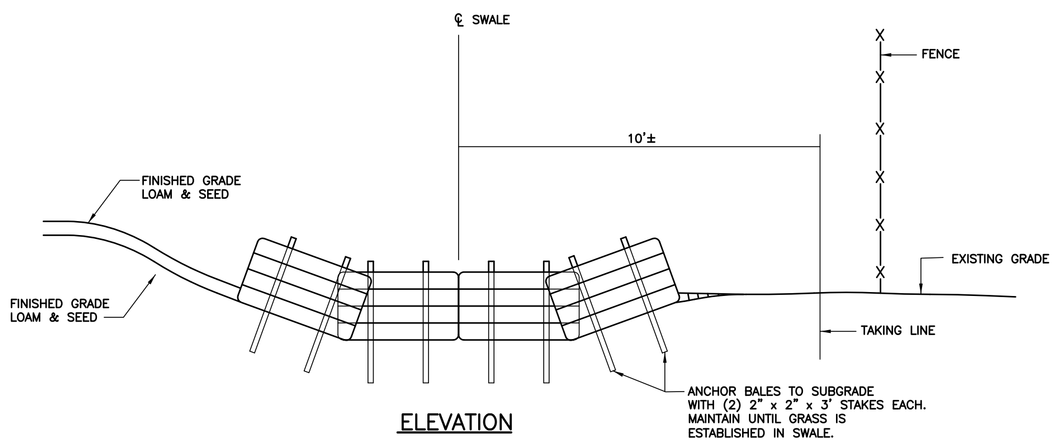

ELEVATION

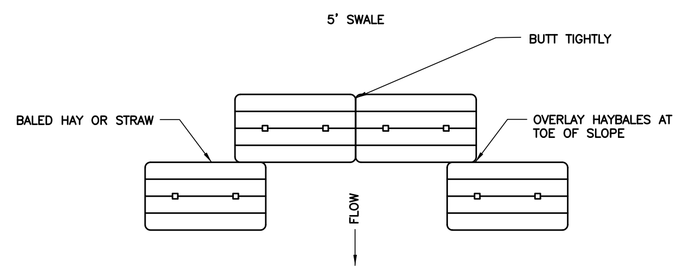

PLAN

SEDIMENT CHECK DAM DETAIL
N.T.S.

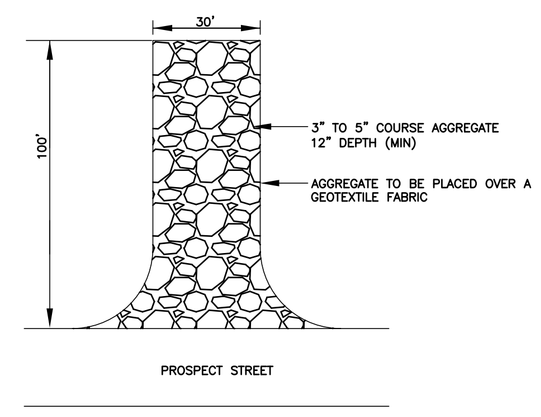

STABILIZED CONSTRUCTION
ENTRANCE PAD DETAIL
NOT TO SCALE

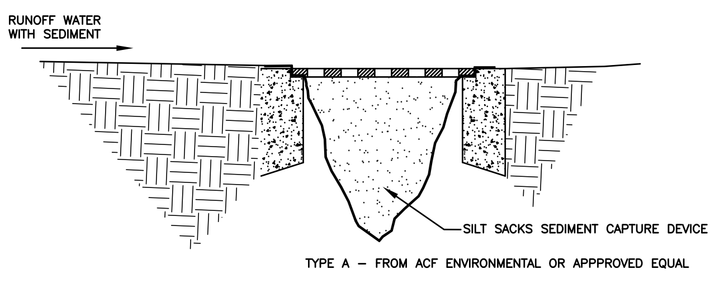

SILT SACK CATCH BASIN INLET
NOT TO SCALE

EROSION CONTROL PLAN

REVISIONS

No.	DATE	DESCRIPTION
1	04/02/2024	WETLAND DELINEATION
2	07/15/2024	PLG BRD ENG COMMENTS
3	09/26/2024	NEW ROAD LAYOUT (LAKE ST)
4	01/30/2025	PLG BRD COMMENTS/129 UNITS
5	04/09/2025	PLG BRD COMMENTS - BSC 3/19/25
6	04/28/2025	PLG BRD COMMENTS

SITE DEVELOPMENT PLAN
"PROSPECT HILL VILLAGE"
A MULTI-UNIT RESIDENTIAL DEVELOPMENT
BELLINGHAM, MASSACHUSETTS

PREPARED FOR:
WALL STREET DEVELOPMENT CORP.
P.O. BOX 272
WESTWOOD, MASSACHUSETTS

GLM Engineering Consultants, Inc.
19 EXCHANGE STREET
HOLLISTON, MA 01746
P: 508-429-1100
F: 508-429-7160
www.GLMengineering.com

JOB No.	16,590
DATE:	NOV. 30, 2023
SCALE:	1"=60'
SHEET:	36 of 43
PLAN #:	27,871

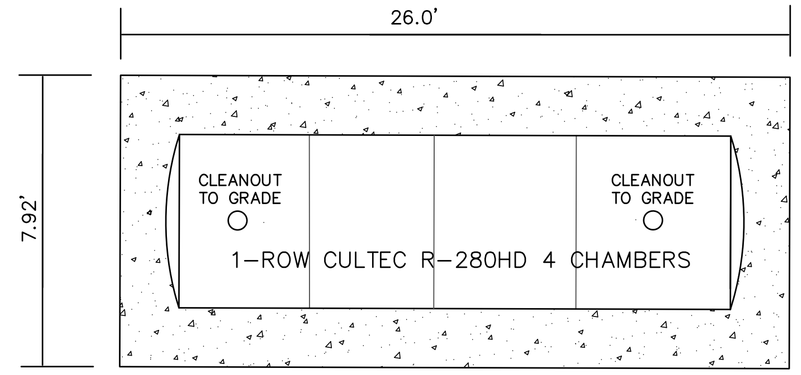

PLAN VIEW

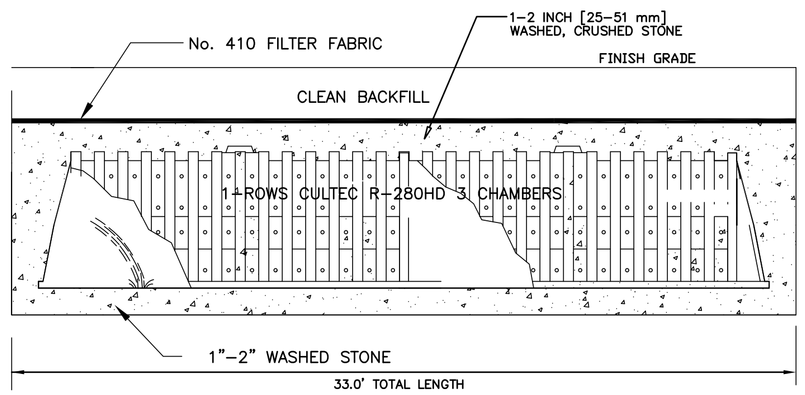

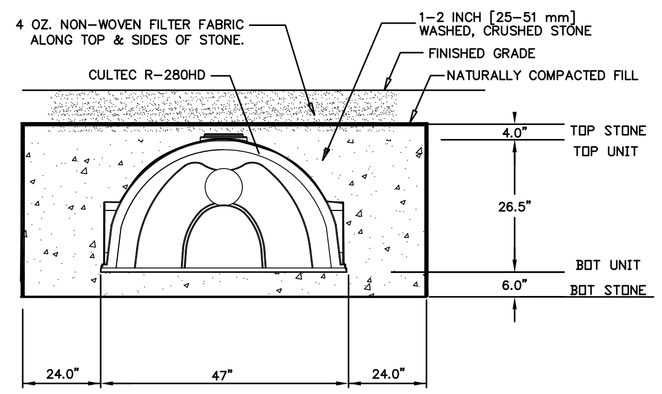

1-ROW CULTEC R-280HD 4 CHAMBERS

NOTES:
1. ALL TOPSOIL & SUBSOIL SHALL BE REMOVED FROM THE BOTTOM AREA OF THE BASIN AND FILLED MATERIAL SHALL COARSE CLEAN GRAVEL OR SAND.

2. INSTALL TWO (2) PER BUILDING. ALL ROOF AREA IS TO BE DIRECTED TO RECHARGE SYSTEMS.

ROOF RECHARGE SYSTEM DETAIL

N.T.S.

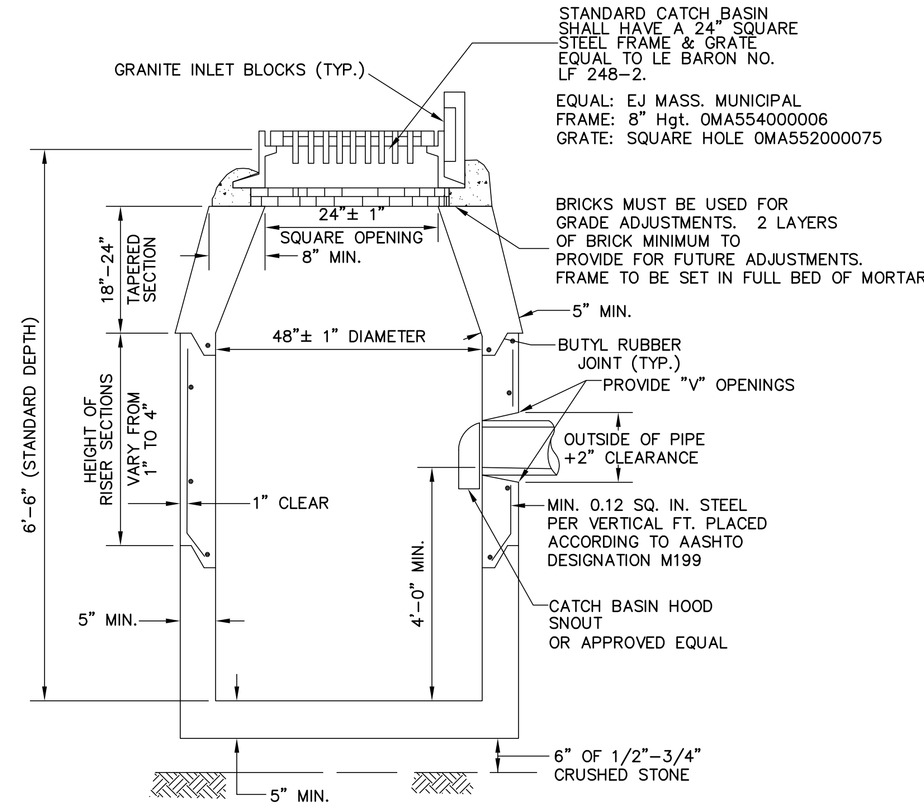

NOTE: NO BELL ENDS IN CATCH BASIN. CONNECTIONS TO BE TIGHTLY SEALED WITH MORTAR.

PRECAST CATCH BASIN DETAIL

NOT TO SCALE

APPROVED BY THE BELLINGHAM PLANNING BOARD:

DATE APPROVED:

I TOWN CLERK OF THE TOWN OF BELLINGHAM RECEIVED AND RECORDED FROM THE PLANNING BOARD APPROVAL OF THIS PLAN AND NO APPEAL HAS BEEN TAKEN FOR TWENTY DAYS NEXT AFTER RECEIPT AND RECORDING OF SAME.

TOWN CLERK DATE

NOTES

1. All construction shall conform to the Tonw of Bellingham Planning Board Rules and Regulations dnd Department of Public Works standards and details.

5. Sidewalk ramps must meet current applicable ADA / AAB standards.

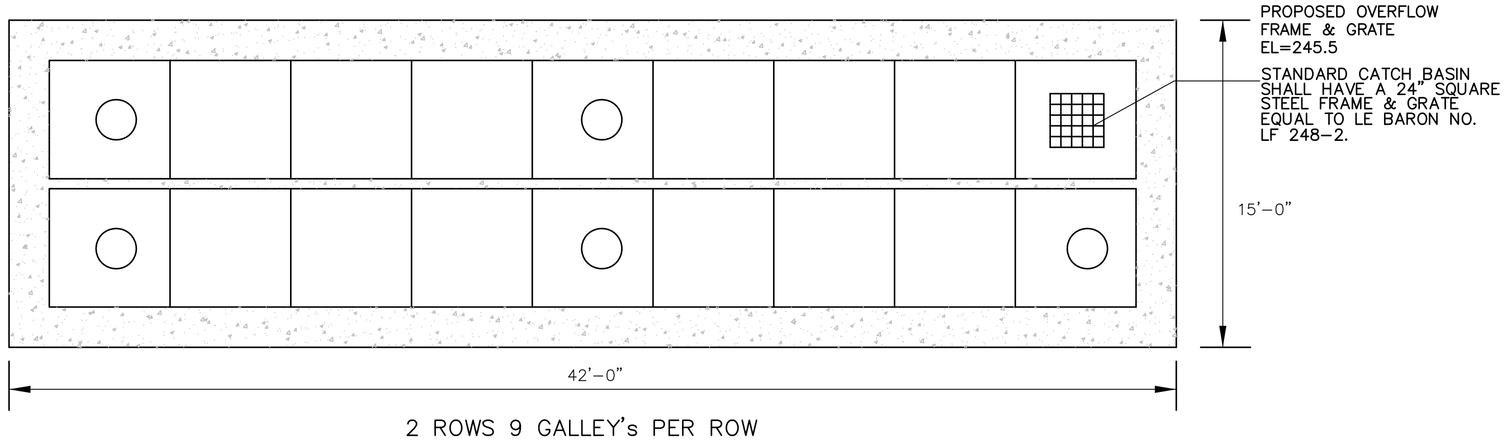

2 ROWS 9 GALLEY's PER ROW
TOTAL 18 4x4x4 GALLEY'S

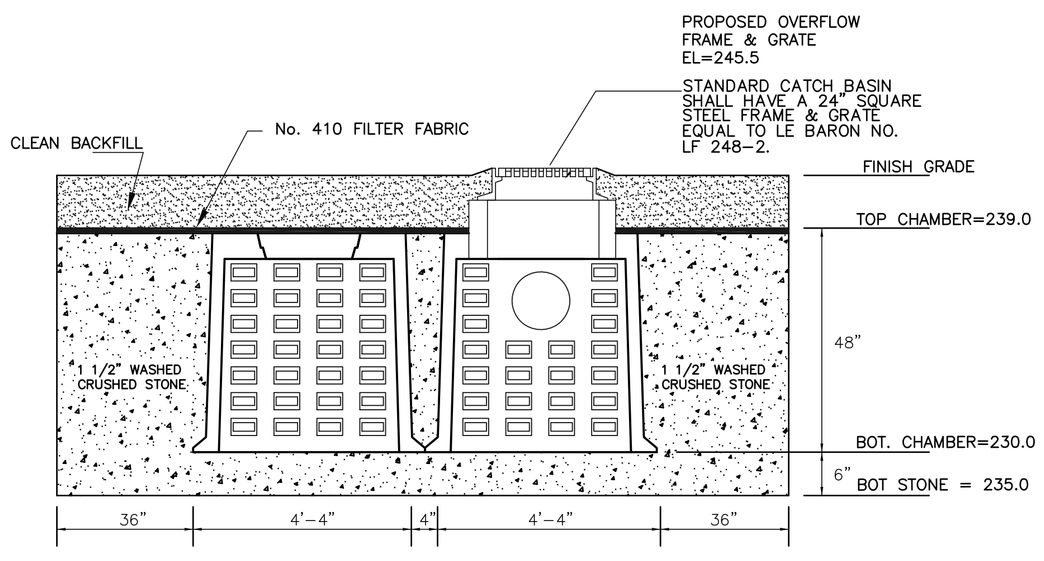

NOTES:
1. CONCRETE: 4,000 PSI MINIMUM AFTER 28 DAYS.
2. DESIGNED FOR H-20 LOADING.
3. GALLEYS TO BE PLACED AGAINST ONE ANOTHER AS INDICATED ON THE GRADING PLAN ON A STONE BASE, WITH 36" OF STONE ALL AROUND.
4. STONE SHALL MEET SECTION M2.01.2 OF THE MHD SPECIFICATIONS.

EQUAL: EJ MASS. MUNICIPAL
FRAME: 8" Hgt. OMA554000006
GRATE: SQUARE HOLE OMA552000075

STORWATER RECHARGE SYSTEM #6

N.T.S.

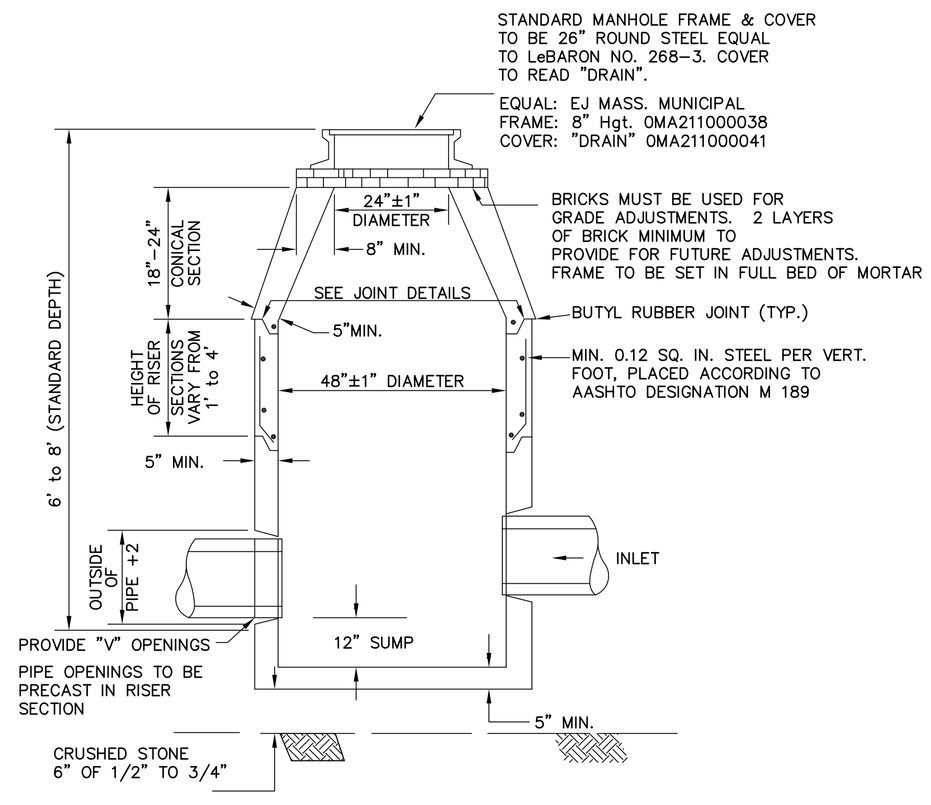

PRECAST MANHOLE DETAIL

NOT TO SCALE

DETAILS

REVISIONS

No.	DATE	DESCRIPTION
1	04/02/2024	WETLAND DELINEATION
2	07/15/2024	PLG BRD ENG COMMENTS
3	09/26/2024	NEW ROAD LAYOUT (LAKE ST)
4	01/30/2025	PLG BRD COMMENTS/129 UNITS
5	04/09/2025	PLG BRD COMMENTS - BSC 3/19/25
6	04/28/2025	PLG BRD COMMENTS

SITE DEVELOPMENT PLAN
"PROSPECT HILL VILLAGE"
A MULTI-UNIT RESIDENTIAL DEVELOPMENT
BELLINGHAM, MASSACHUSETTS

PREPARED FOR:
WALL STREET DEVELOPMENT CORP.
P.O. BOX 272
WESTWOOD, MASSACHUSETTS

GLM Engineering Consultants, Inc.
19 EXCHANGE STREET
HOLLISTON, MA 01746
P: 508-429-1100
F: 508-429-7160
www.GLMengineering.com

JOB No.	16,590
DATE:	NOV. 30, 2023
SCALE:	1"=60'
SHEET:	37 of 43
PLAN #:	27,871

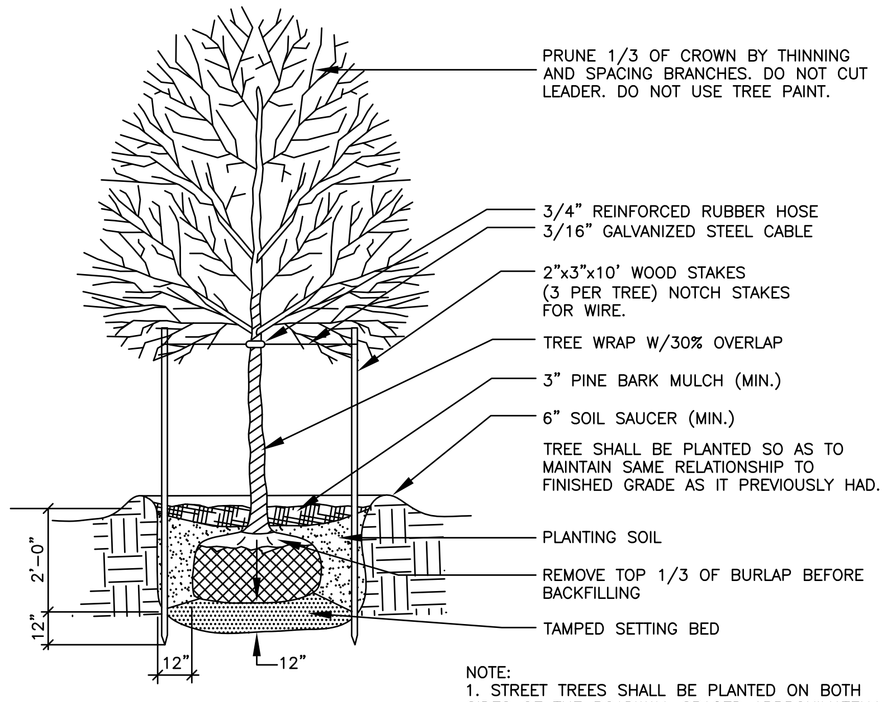

NOTE:
1. STREET TREES SHALL BE PLANTED ON BOTH SIDES OF THE ROADWAY, SPACED APPROXIMATELY 40 FT. APART AND APPROXIMATELY 10 FT FROM SIDWALK OR ROADWAY.
2. STREET TREES SHALL BE MINIMUM OF 2 1/2" CALIPER 4 FT. ABOVE THE GROUND.

STREET TREE DETAIL

NOT TO SCALE

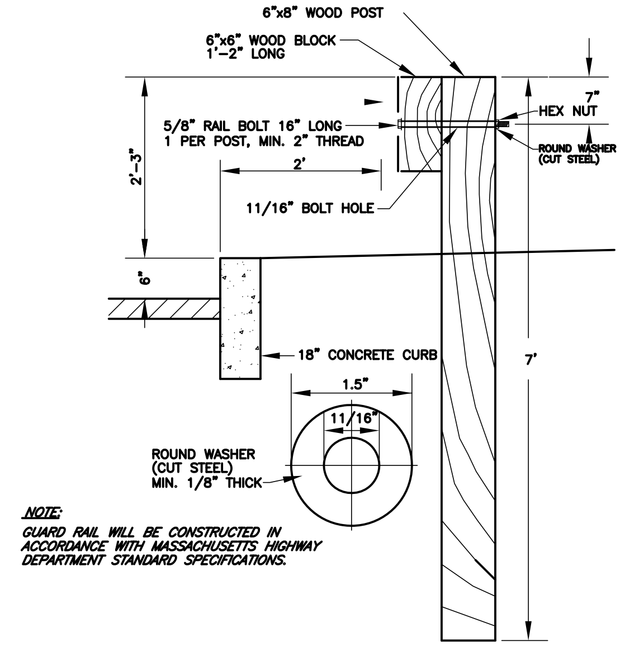

NOTE:
GUARD RAIL WILL BE CONSTRUCTED IN ACCORDANCE WITH MASSACHUSETTS HIGHWAY DEPARTMENT STANDARD SPECIFICATIONS.

SINGLE FACE GUARD RAIL WITH WOOD POST

N.T.S.

DIG SAFE 1-888-344-7233

NOTE: IT SHALL BE THE RESPONSIBILITY OF THE CONTRACTOR TO VERIFY LOCATIONS AND ELEVATIONS OF EXISTING UTILITIES PRIOR TO COMMENCEMENT OF ANY CONSTRUCTION.
DIGSAFE IS TO BE NOTIFIED 72 WORKING HOURS IN ADVANCE OF CONSTRUCTION.
DIGSAFE 1-888-344-7233

APPROVED BY THE BELLINGHAM PLANNING BOARD:

_____

_____

_____

_____

_____

DATE APPROVED: _____

I TOWN CLERK OF THE TOWN OF BELLINGHAM RECEIVED AND RECORDED FROM THE PLANNING BOARD APPROVAL OF THIS PLAN AND NO APPEAL HAS BEEN TAKEN FOR TWENTY DAYS NEXT AFTER RECEIPT AND RECORDING OF SAME.

_____ _____
TOWN CLERK DATE

NOTES

1. All construction shall conform to the Tonw of Bellingham Planning Board Rules and Regulations and Department of Public Works standards and details.

5. Sidewalk ramps must meet current applicable ADA / AAB standards.

NOTE:
CURB INLETS TO BE INSTALLED AT ALL CATCH BASIN WITH TRANSITIONS CURBS.

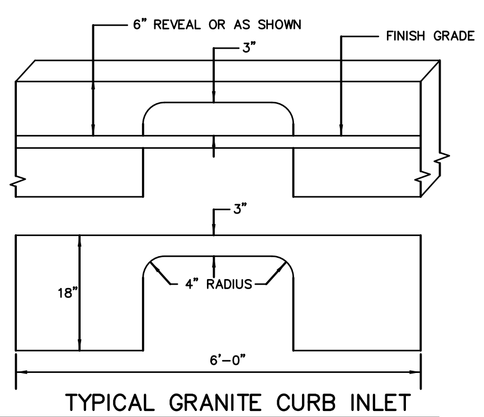

TYPICAL GRANITE CURB INLET

N.T.S.

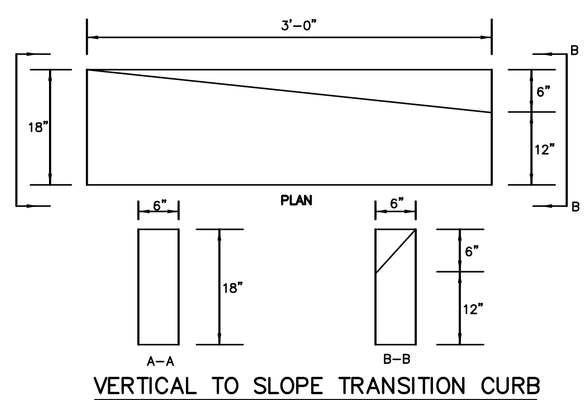

VERTICAL TO SLOPE TRANSITION CURB

N.T.S.

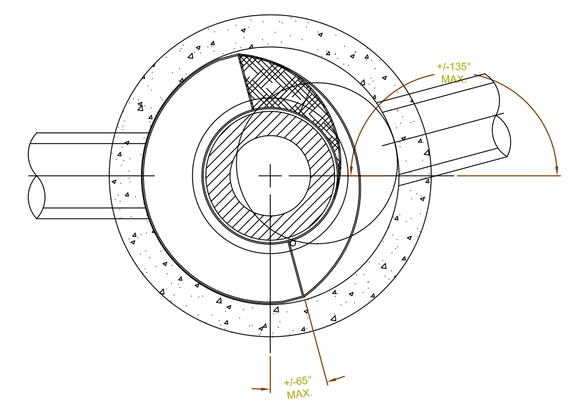

PLAN VIEW B-B

N.T.S.

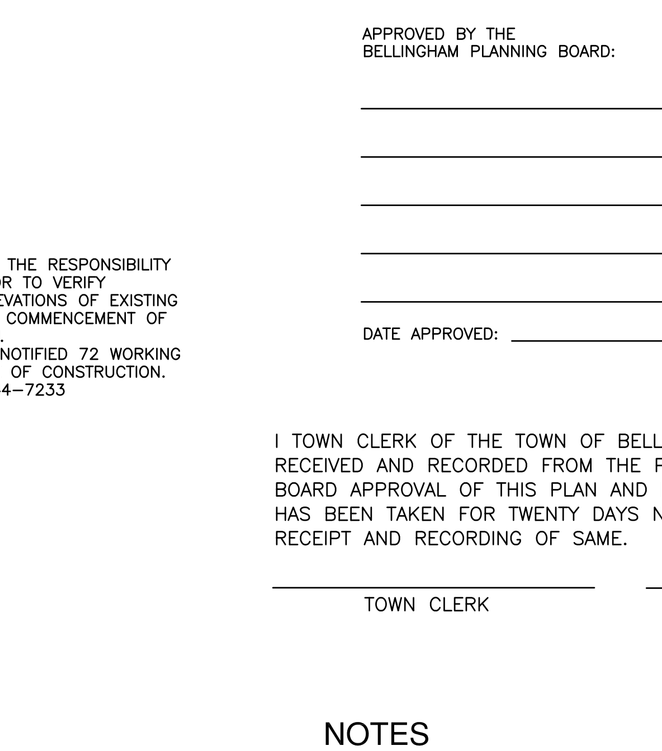

ELEVATION A-A

N.T.S.

FRAME AND COVER
(DIAMETER VARIES)
N.T.S.

GENERAL NOTES
1. CONTECH TO PROVIDE ALL MATERIALS UNLESS NOTED OTHERWISE.
2. DIMENSIONS MARKED WITH ( ) ARE REFERENCE DIMENSIONS. ACTUAL DIMENSIONS MAY VARY.
3. FOR FABRICATION DRAWINGS WITH DETAILED STRUCTURE DIMENSIONS AND WEIGHTS, PLEASE CONTACT YOUR CONTECH CONSTRUCTION PRODUCTS REPRESENTATIVE. www.contech-cpi.com
4. CDS WATER QUALITY STRUCTURE SHALL BE IN ACCORDANCE WITH ALL DESIGN DATA AND INFORMATION CONTAINED IN THIS DRAWING.
5. STRUCTURE SHALL MEET AASHTO HS20 AND CASTINGS SHALL MEET AASHTO M306 LOAD RATING, ASSUMING GROUNDWATER ELEVATION AT, OR BELOW, THE OUTLET PIPE INVERT ELEVATION. ENGINEER OF RECORD TO CONFIRM ACTUAL GROUNDWATER ELEVATION.
6. PVC HYDRAULIC SHEAR PLATE IS PLACED ON SHELF AT BOTTOM OF SCREEN CYLINDER. REMOVE AND REPLACE AS NECESSARY DURING MAINTENANCE CLEANING.

INSTALLATION NOTES
1. ANY SUB-BASE, BACKFILL DEPTH, AND/OR ANTI-FLOTATION PROVISIONS ARE SITE-SPECIFIC DESIGN CONSIDERATIONS AND SHALL BE SPECIFIED BY ENGINEER OF RECORD.
2. CONTRACTOR TO PROVIDE EQUIPMENT WITH SUFFICIENT LIFTING AND REACH CAPACITY TO LIFT AND SET THE CDS MANHOLE STRUCTURE (LIFTING CLUTCHES PROVIDED).
3. CONTRACTOR TO ADD JOINT SEALANT BETWEEN ALL STRUCTURE SECTIONS, AND ASSEMBLE STRUCTURE.
4. CONTRACTOR TO PROVIDE, INSTALL, AND GROUT PIPES. MATCH PIPE INVERTS WITH ELEVATIONS SHOWN.
5. CONTRACTOR TO TAKE APPROPRIATE MEASURES TO ASSURE UNIT IS WATER TIGHT, HOLDING WATER TO FLOWLINE INVERT MINIMUM. IT IS SUGGESTED THAT ALL JOINTS BELOW PIPE INVERTS ARE GROUTED.

WATER QUALITY UNIT DETAIL DMH#4
CDS1515-3-C CDS INLINE STANDARD DETAIL

NOT TO SCALE

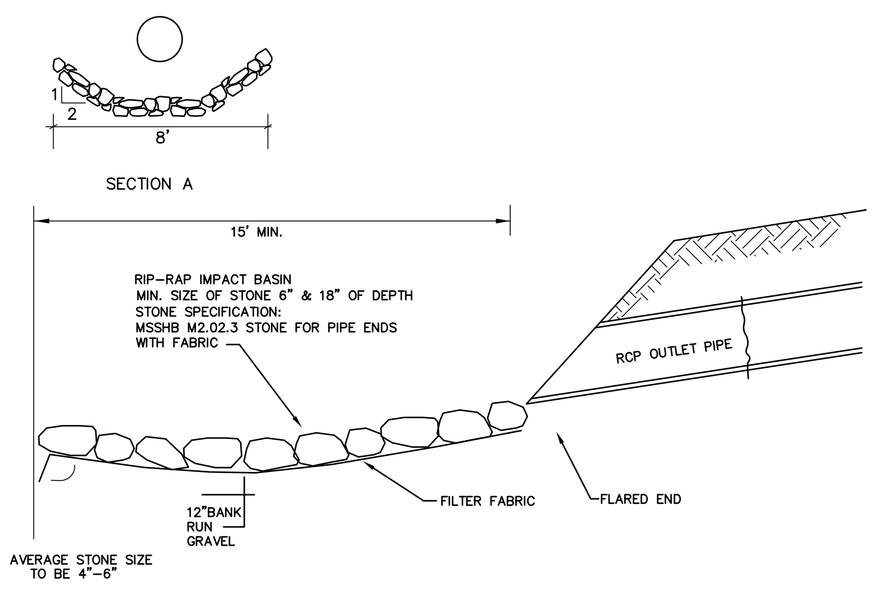

RIPRAP OUTLET DETAIL

NOT TO SCALE

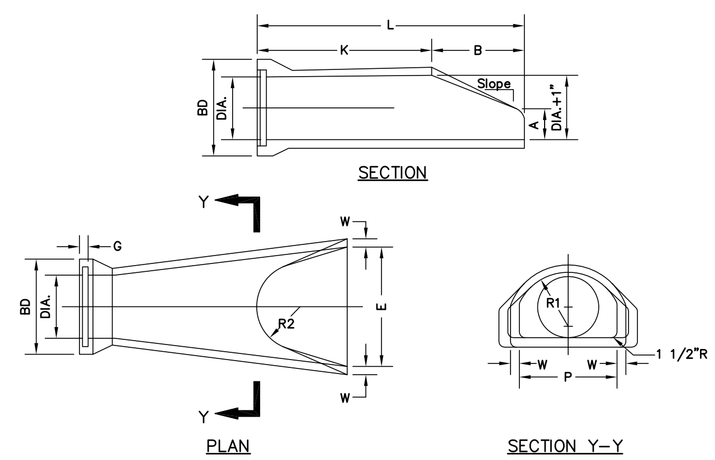

DIA.	W	A	B	C	D	E	BD	K	L	P	DIA. +1"	R1	R2	S	G	Slope
12"	2"	4"	2'-0"	4'-0 7/8"	6'-1 3/8"	2'-0"	20"	4'-8 1/8"	6'-6 1/8"	19 15/16"	13"	10 1/8"	9"	4"	2 1/2"	3:1
15"	2 1/4"	6"	2'-3"	3'-10"	6'-1 1/2"	2'-6"	24"	4'-3 11/16"	6'-6 11/16"	24 5/16"	16"	12 1/2"	11"	4"	2 1/2"	3:1
18"	2 1/2"	9"	2'-3"	3'-10"	6'-1"	3'-0"	28"	4'-3 7/8"	6'-6 7/8"	29"	19"	15 1/2"	12"	4"	2 3/4"	3:1
21"	2 3/4"	9"	2'-11"	3'-2"	6'-1"	3'-6"	32"	3'-8 5/16"	6'-7 5/16"	31 5/8"	22"	16 1/8"	13"	4"	2 3/4"	3:1
24"	3"	9 1/2"	3'-1 1/2"	2'-6"	6'-1"	4'-0"	36"	3'-0 1/2"	6'-8"	33 3/16"	25"	16 13/16"	14"	4"	3"	3:1

R.C.P. FLARED END SECTION DETAIL

NOT TO SCALE

DETAILS

REVISIONS		
No.	DATE	DESCRIPTION
1	04/02/2024	WETLAND DELINEATION
2	07/15/2024	PLG BRD ENG COMMENTS
3	09/26/2024	NEW ROAD LAYOUT (LAKE ST)
4	01/30/2025	PLG BRD COMMENTS/129 UNITS
5	04/09/2025	PLG BRD COMMENTS - BSC 3/19/25
6	04/28/2025	PLG BRD COMMENTS

SITE DEVELOPMENT PLAN
"PROSPECT HILL VILLAGE"
A MULTI-UNIT RESIDENTIAL DEVELOPMENT
BELLINGHAM, MASSACHUSETTS

PREPARED FOR:
WALL STREET DEVELOPMENT CORP.
P.O. BOX 272
WESTWOOD, MASSACHUSETTS

GLM Engineering Consultants, Inc.
19 EXCHANGE STREET
HOLLISTON, MA 01746
P: 508-429-1100
F: 508-429-7160
www.GLMengineering.com

JOB No.	16,590
DATE:	NOV. 30, 2023
SCALE:	1"=60'
SHEET:	38 of 43
PLAN #:	27,871

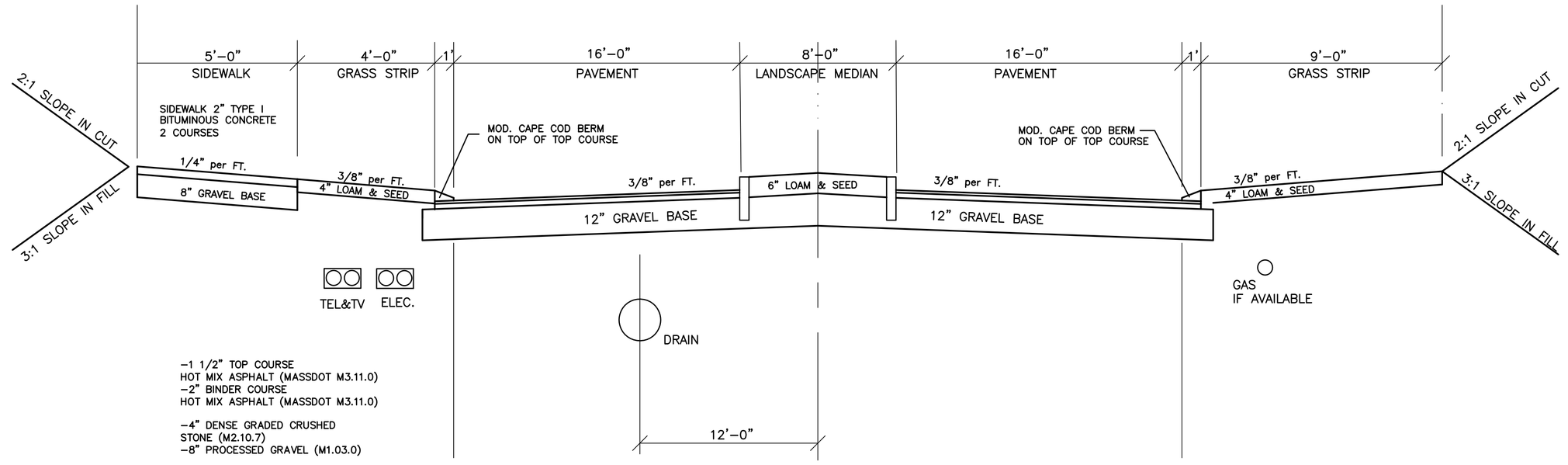

TYPICAL ROADWAY CROSS SECTION

NOTES

1. All construction shall conform to the Town of Bellingham Planning Board Rules and Regulations dnd Department of Public Works standards and details.

5. Sidewalk ramps must meet current applicable ADA / AAB standards.

APPROVED BY THE
BELLINGHAM PLANNING BOARD:

DATE APPROVED: _____

I TOWN CLERK OF THE TOWN OF BELLINGHAM RECEIVED AND RECORDED FROM THE PLANNING BOARD APPROVAL OF THIS PLAN AND NO APPEAL HAS BEEN TAKEN FOR TWENTY DAYS NEXT AFTER RECEIPT AND RECORDING OF SAME.

TOWN CLERK _____ DATE _____

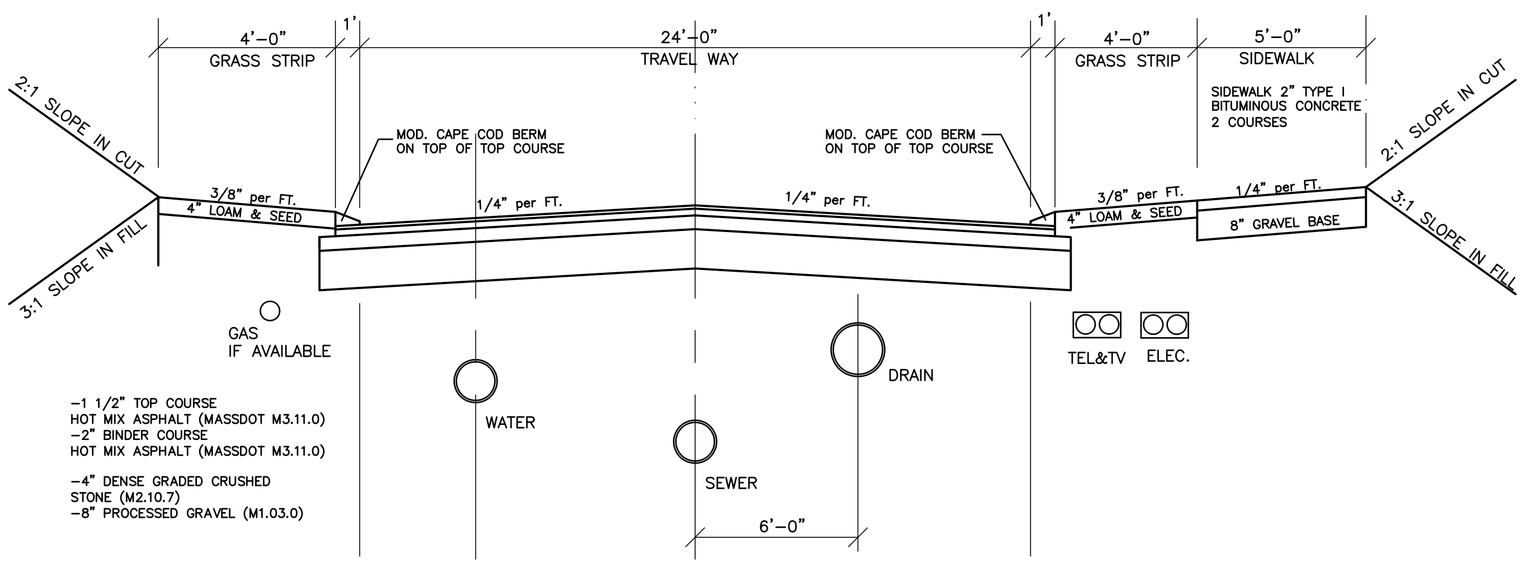

TYPICAL ROADWAY CROSS SECTION

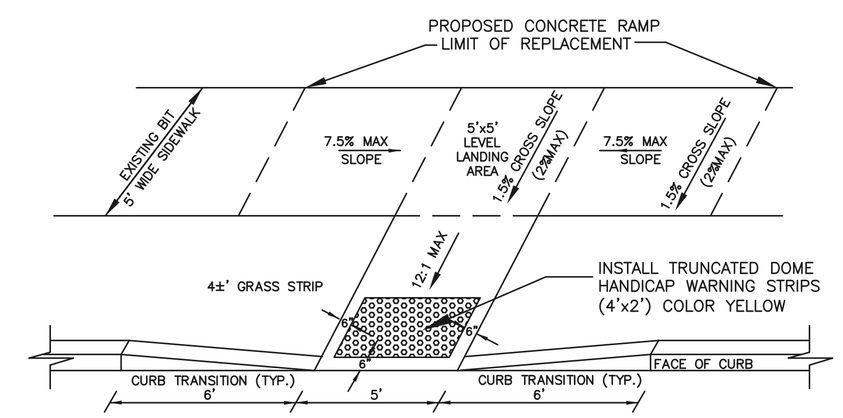

HANDICAP SIDEWALK RAMP DETAIL

N.T.S.

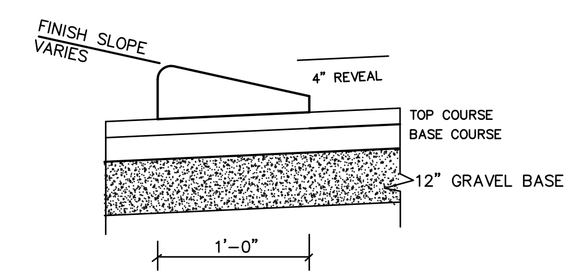

MODIFIED CAPE COD BERM DETAIL

NOT TO SCALE:

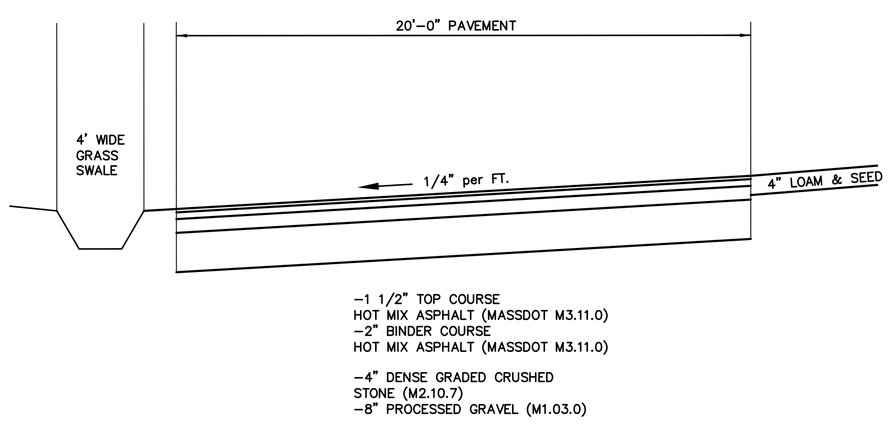

TYPICAL EMERGENCY DRIVE ROADWAY CROSS SECTION

NOT TO SCALE

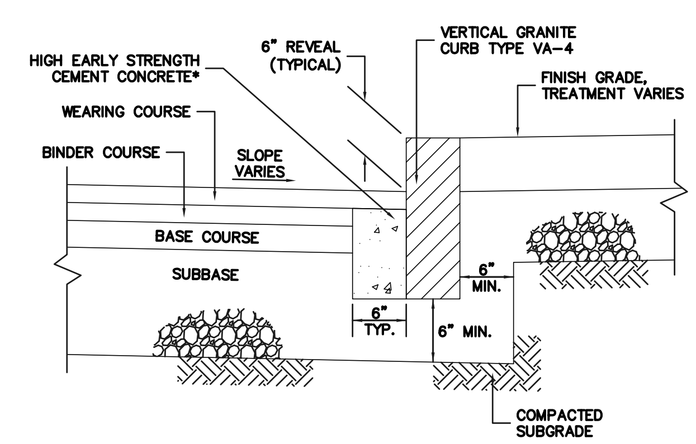

VERTICAL GRANITE CURB DETAIL

N.T.S.

DETAILS

REVISIONS

No.	DATE	DESCRIPTION
1	04/02/2024	WETLAND DELINEATION
2	07/15/2024	PLG BRD ENG COMMENTS
3	09/26/2024	NEW ROAD LAYOUT (LAKE ST)
4	01/30/2025	PLG BRD COMMENTS/129 UNITS
5	04/09/2025	PLG BRD COMMENTS - BSC 3/19/25
6	04/28/2025	PLG BRD COMMENTS

SITE DEVELOPMENT PLAN
"PROSPECT HILL VILLAGE"
A MULTI-UNIT RESIDENTIAL DEVELOPMENT
BELLINGHAM, MASSACHUSETTS

PREPARED FOR:
WALL STREET DEVELOPMENT CORP.
P.O. BOX 272
WESTWOOD, MASSACHUSETTS

GLM Engineering Consultants, Inc.
19 EXCHANGE STREET
HOLLISTON, MA 01746
P: 508-429-1100
F: 508-429-7160
www.GLMengineering.com

JOB No.	16,590
DATE:	NOV. 30, 2023
SCALE:	1"=60'
SHEET:	39 of 43
PLAN #:	27,871

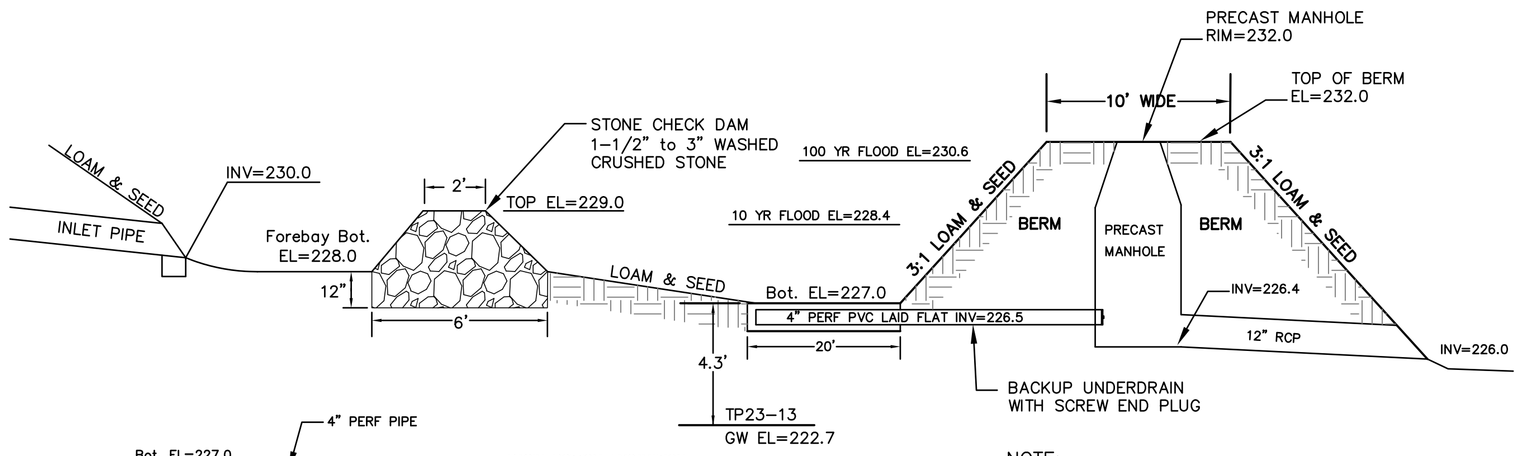

BACKUP UNDERDRAIN

BASIN BOTTOM EXCAVATION:
ALL TOPSOIL, SUBSOIL AND ANY DELETERIOUS MATERIAL MUST BE REMOVED FROM THE BOTTOM AREA OF THE DRAINAGE BASIN AND FILLED WITH APPROVED, CLEAN, GRANULAR SAND. THE FILL SHALL NOT CONTAIN ANY MATERIAL LARGER THAN 2 INCHES AND BE GRADED SO NOT MORE THAN 45% OF THE SAMPLE IS RETAINED IN A #4 SIEVE, OF THAT PASSING, 20% OR LESS SHALL PASS A #100 SIEVE AND 5% OR LESS SHALL PASS THE #200 SIEVE.

NOTE:
THE BASIN SIDE SLOPES AND BOTTOM SHALL BE PROVIDED WITH FOUR INCHES OF LOAM, SEEDED AT THE RATE OF TWO POUNDS RED TOP, 15 POUNDS CREEPING RED FESCUE AND 20 POUNDS TALL FESCUE PER ACRE. AT NO TIME SHALL A SEED MIX CONSIST OF MORE THAN 10% ANNUAL RYES.

DRAINAGE RECHARGE BASIN #3 DETAIL

NOT TO SCALE

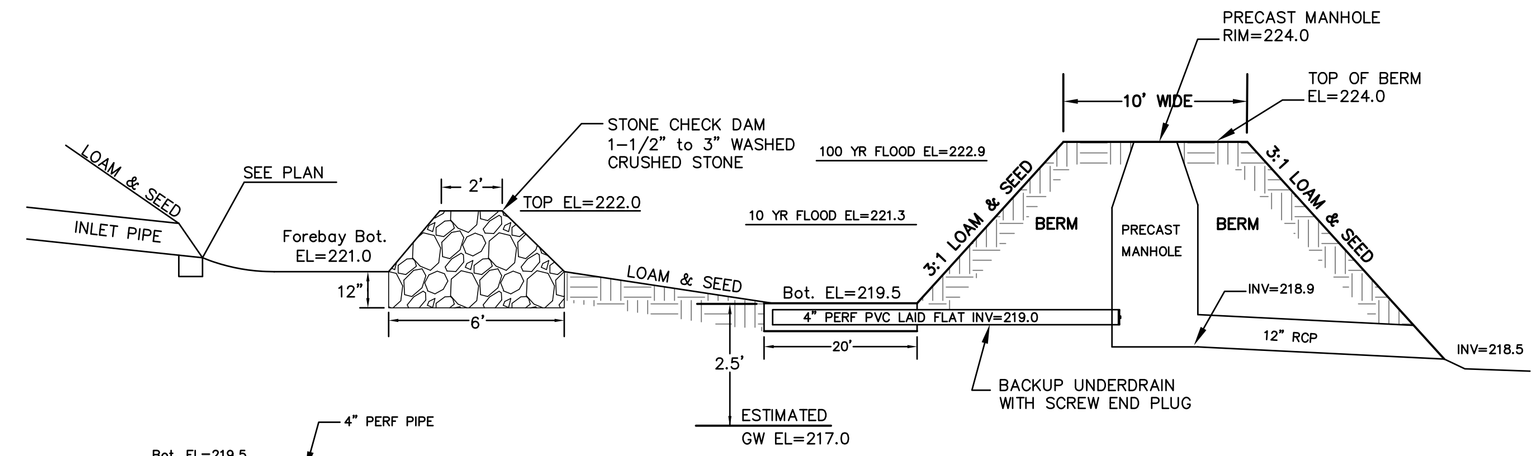

BACKUP UNDERDRAIN

BASIN BOTTOM EXCAVATION:
ALL TOPSOIL, SUBSOIL AND ANY DELETERIOUS MATERIAL MUST BE REMOVED FROM THE BOTTOM AREA OF THE DRAINAGE BASIN AND FILLED WITH APPROVED, CLEAN, GRANULAR SAND. THE FILL SHALL NOT CONTAIN ANY MATERIAL LARGER THAN 2 INCHES AND BE GRADED SO NOT MORE THAN 45% OF THE SAMPLE IS RETAINED IN A #4 SIEVE, OF THAT PASSING, 20% OR LESS SHALL PASS A #100 SIEVE AND 5% OR LESS SHALL PASS THE #200 SIEVE.

NOTE:
THE BASIN SIDE SLOPES AND BOTTOM SHALL BE PROVIDED WITH FOUR INCHES OF LOAM, SEEDED AT THE RATE OF TWO POUNDS RED TOP, 15 POUNDS CREEPING RED FESCUE AND 20 POUNDS TALL FESCUE PER ACRE. AT NO TIME SHALL A SEED MIX CONSIST OF MORE THAN 10% ANNUAL RYES.

DRAINAGE RECHARGE BASIN #4 DETAIL

NOT TO SCALE

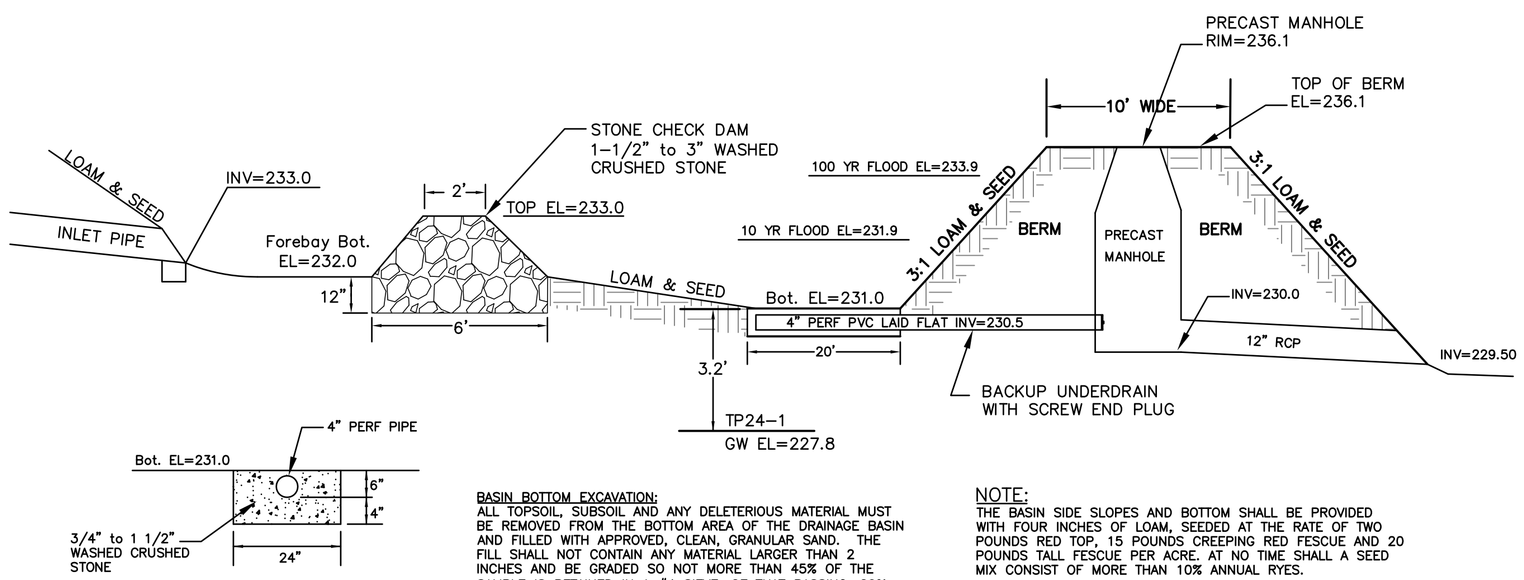

BACKUP UNDERDRAIN

BASIN BOTTOM EXCAVATION:
ALL TOPSOIL, SUBSOIL AND ANY DELETERIOUS MATERIAL MUST BE REMOVED FROM THE BOTTOM AREA OF THE DRAINAGE BASIN AND FILLED WITH APPROVED, CLEAN, GRANULAR SAND. THE FILL SHALL NOT CONTAIN ANY MATERIAL LARGER THAN 2 INCHES AND BE GRADED SO NOT MORE THAN 45% OF THE SAMPLE IS RETAINED IN A #4 SIEVE, OF THAT PASSING, 20% OR LESS SHALL PASS A #100 SIEVE AND 5% OR LESS SHALL PASS THE #200 SIEVE.

NOTE:
THE BASIN SIDE SLOPES AND BOTTOM SHALL BE PROVIDED WITH FOUR INCHES OF LOAM, SEEDED AT THE RATE OF TWO POUNDS RED TOP, 15 POUNDS CREEPING RED FESCUE AND 20 POUNDS TALL FESCUE PER ACRE. AT NO TIME SHALL A SEED MIX CONSIST OF MORE THAN 10% ANNUAL RYES.

DRAINAGE RECHARGE BASIN #2 DETAIL

NOT TO SCALE

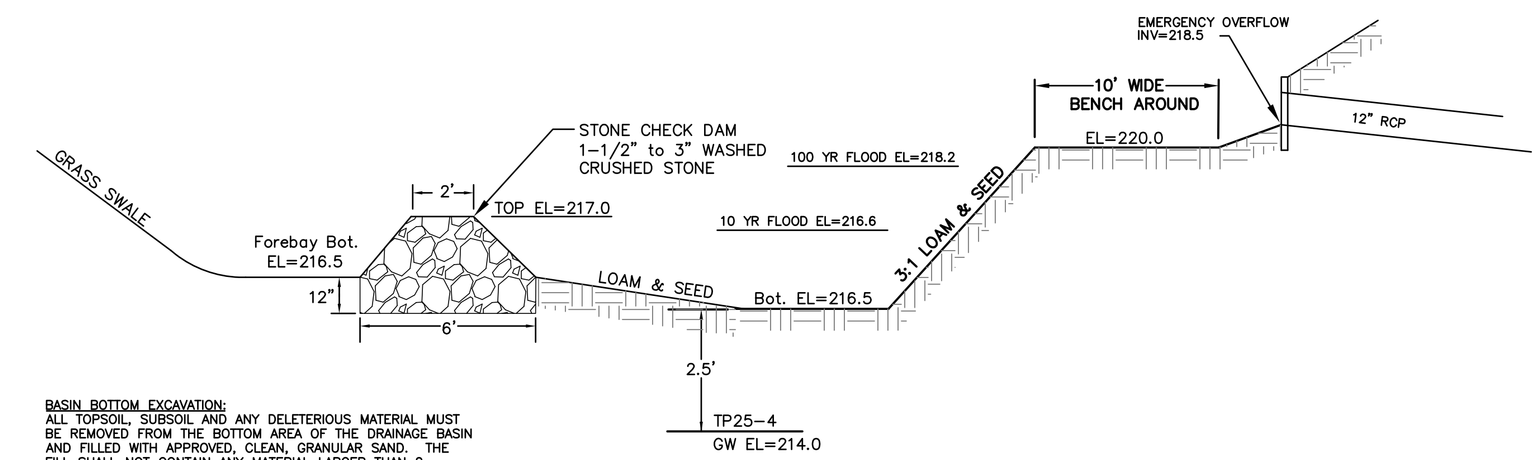

BASIN BOTTOM EXCAVATION:
ALL TOPSOIL, SUBSOIL AND ANY DELETERIOUS MATERIAL MUST BE REMOVED FROM THE BOTTOM AREA OF THE DRAINAGE BASIN AND FILLED WITH APPROVED, CLEAN, GRANULAR SAND. THE FILL SHALL NOT CONTAIN ANY MATERIAL LARGER THAN 2 INCHES AND BE GRADED SO NOT MORE THAN 45% OF THE SAMPLE IS RETAINED IN A #4 SIEVE, OF THAT PASSING, 20% OR LESS SHALL PASS A #100 SIEVE AND 5% OR LESS SHALL PASS THE #200 SIEVE.

NOTE:
THE BASIN SIDE SLOPES AND BOTTOM SHALL BE PROVIDED WITH FOUR INCHES OF LOAM, SEEDED AT THE RATE OF TWO POUNDS RED TOP, 15 POUNDS CREEPING RED FESCUE AND 20 POUNDS TALL FESCUE PER ACRE. AT NO TIME SHALL A SEED MIX CONSIST OF MORE THAN 10% ANNUAL RYES.

DRAINAGE RECHARGE BASIN #5 DETAIL

NOT TO SCALE

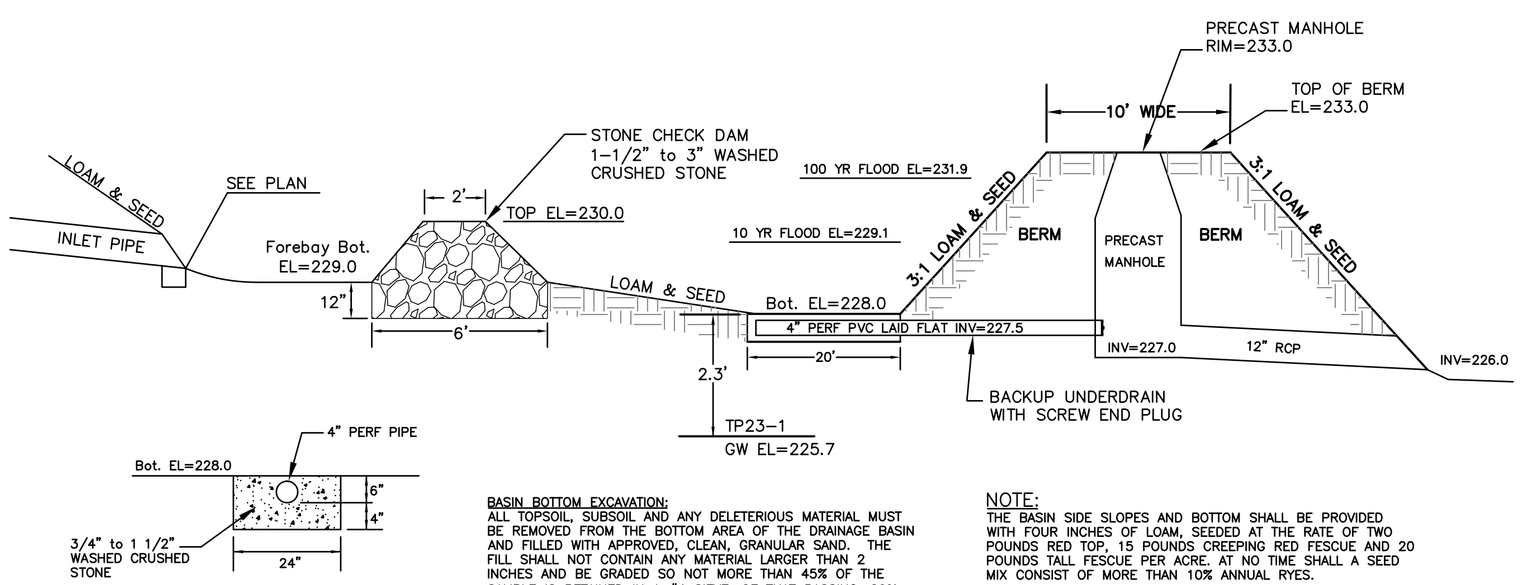

BACKUP UNDERDRAIN

BASIN BOTTOM EXCAVATION:
ALL TOPSOIL, SUBSOIL AND ANY DELETERIOUS MATERIAL MUST BE REMOVED FROM THE BOTTOM AREA OF THE DRAINAGE BASIN AND FILLED WITH APPROVED, CLEAN, GRANULAR SAND. THE FILL SHALL NOT CONTAIN ANY MATERIAL LARGER THAN 2 INCHES AND BE GRADED SO NOT MORE THAN 45% OF THE SAMPLE IS RETAINED IN A #4 SIEVE, OF THAT PASSING, 20% OR LESS SHALL PASS A #100 SIEVE AND 5% OR LESS SHALL PASS THE #200 SIEVE.

NOTE:
THE BASIN SIDE SLOPES AND BOTTOM SHALL BE PROVIDED WITH FOUR INCHES OF LOAM, SEEDED AT THE RATE OF TWO POUNDS RED TOP, 15 POUNDS CREEPING RED FESCUE AND 20 POUNDS TALL FESCUE PER ACRE. AT NO TIME SHALL A SEED MIX CONSIST OF MORE THAN 10% ANNUAL RYES.

DRAINAGE RECHARGE BASIN #1 DETAIL

NOT TO SCALE

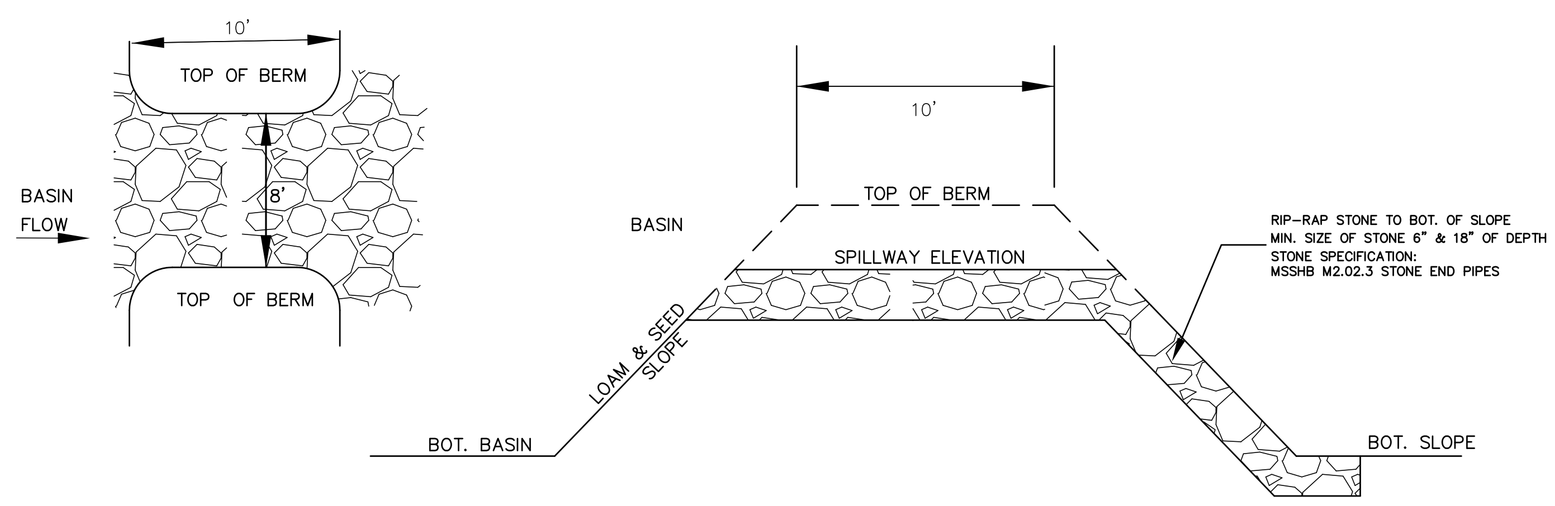

DETENTION BASIN EMERGENCY SPILLWAY DETAIL

NOT TO SCALE

DETAILS

REVISIONS

No.	DATE	DESCRIPTION
1	04/02/2024	WETLAND DELINEATION
2	07/15/2024	PLG BRD ENG COMMENTS
3	09/26/2024	NEW ROAD LAYOUT (LAKE ST)
4	01/30/2025	PLG BRD COMMENTS/129 UNITS
5	04/09/2025	PLG BRD COMMENTS - BSC 3/19/25
6	04/28/2025	PLG BRD COMMENTS

SITE DEVELOPMENT PLAN
"PROSPECT HILL VILLAGE"
A MULTI-UNIT RESIDENTIAL DEVELOPMENT
BELLINGHAM, MASSACHUSETTS

PREPARED FOR:
WALL STREET DEVELOPMENT CORP.
P.O. BOX 272
WESTWOOD, MASSACHUSETTS

GLM Engineering Consultants, Inc.
19 EXCHANGE STREET
HOLLISTON, MA 01746
P: 508-429-1100
F: 508-429-7160
www.GLMengineering.com

JOB No.	16,590
DATE:	NOV. 30, 2023
SCALE:	1"=60'
SHEET:	40 of 43
PLAN #:	27,871

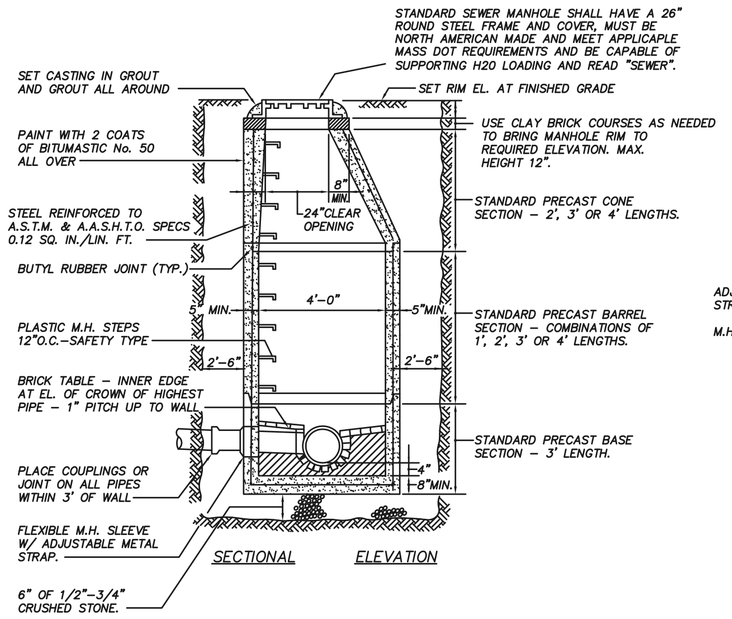

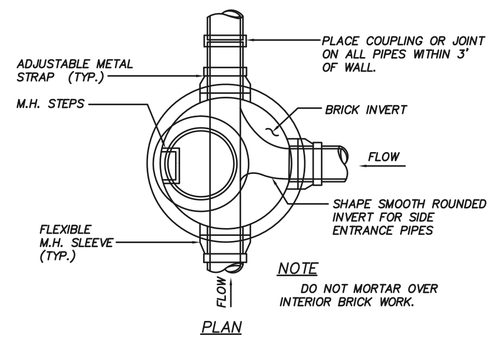

TYPICAL PRECAST CONCRETE SEWER MANHOLE DETAILS

NOT TO SCALE

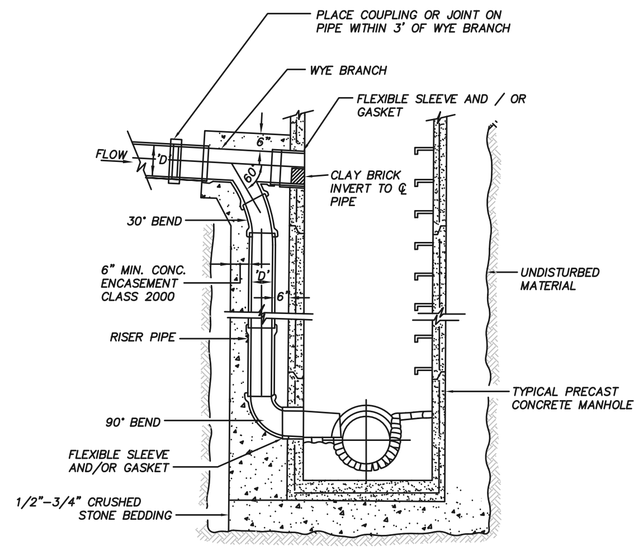

TYPICAL OUTSIDE DROP INLET MANHOLE DETAILS

NOT TO SCALE

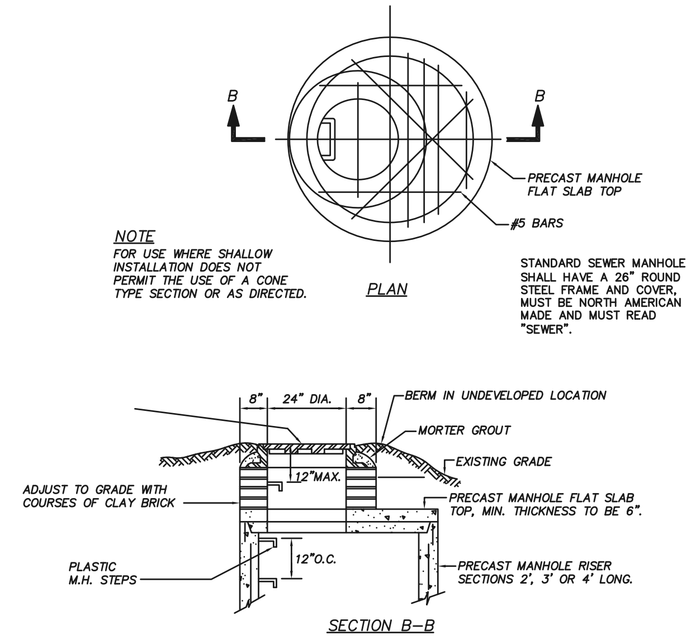

FLAT TOP SECTION

NOT TO SCALE

APPROVED BY THE
BELLINGHAM PLANNING BOARD:

DATE APPROVED:

I TOWN CLERK OF THE TOWN OF BELLINGHAM RECEIVED AND RECORDED FROM THE PLANNING BOARD APPROVAL OF THIS PLAN AND NO APPEAL HAS BEEN TAKEN FOR TWENTY DAYS NEXT AFTER RECEIPT AND RECORDING OF SAME.

TOWN CLERK DATE

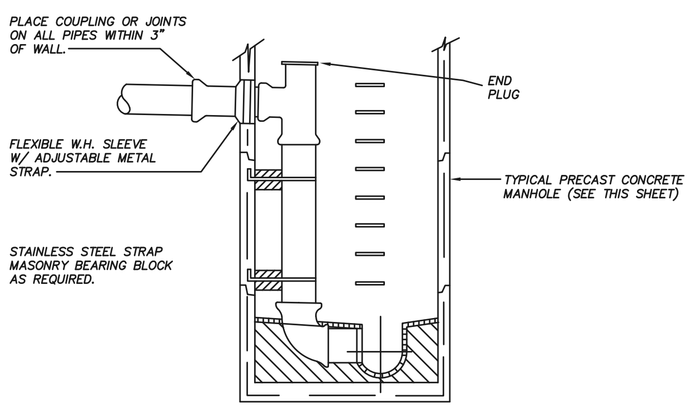

TYPICAL INSIDE DROP INLET MANHOLE DETAILS

NOT TO SCALE

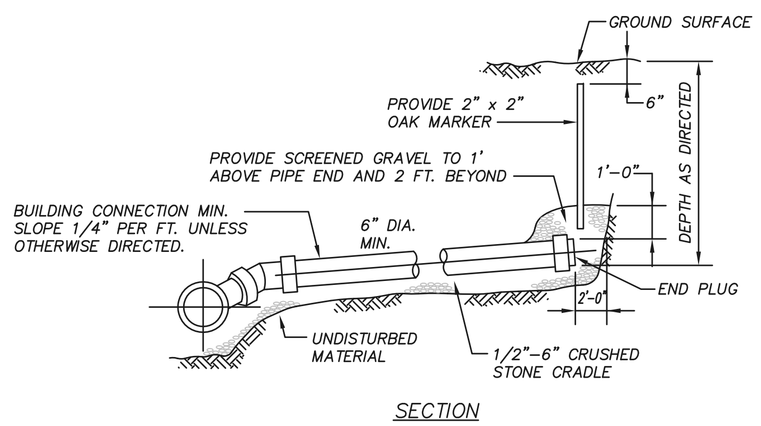

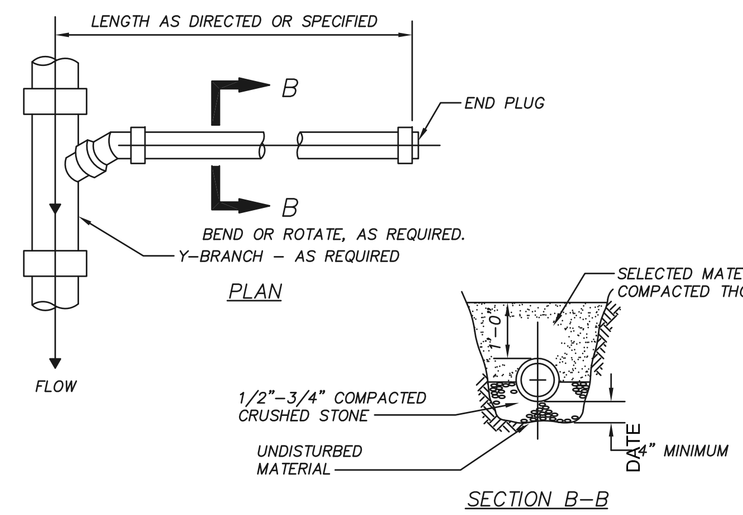

TYPICAL BUILDING CONNECTION

NOT TO SCALE

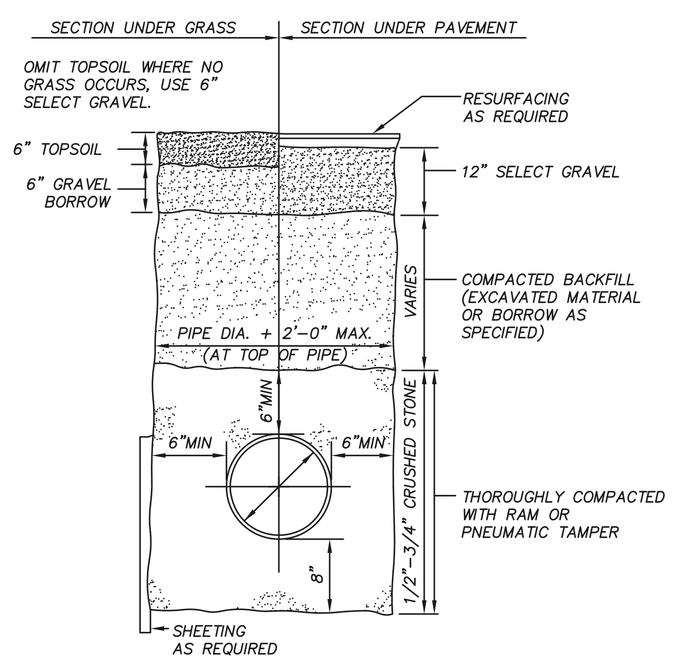

TYPICAL SEWER TRENCH DETAIL

NOT TO SCALE

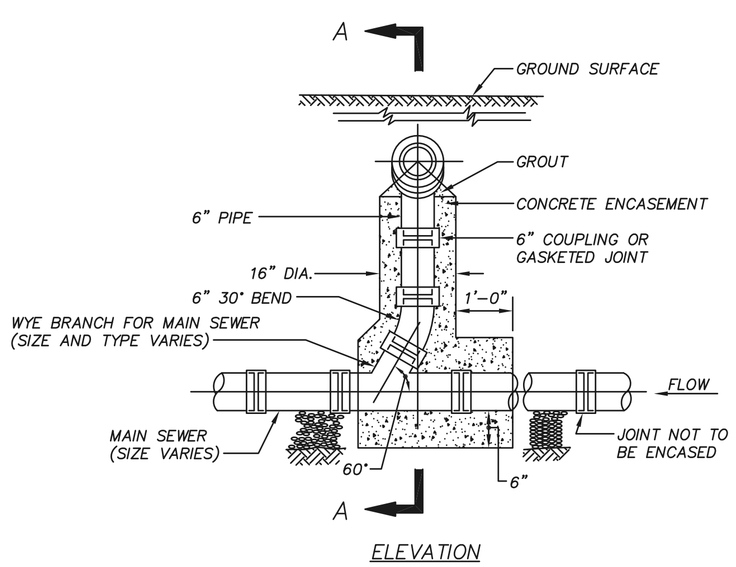

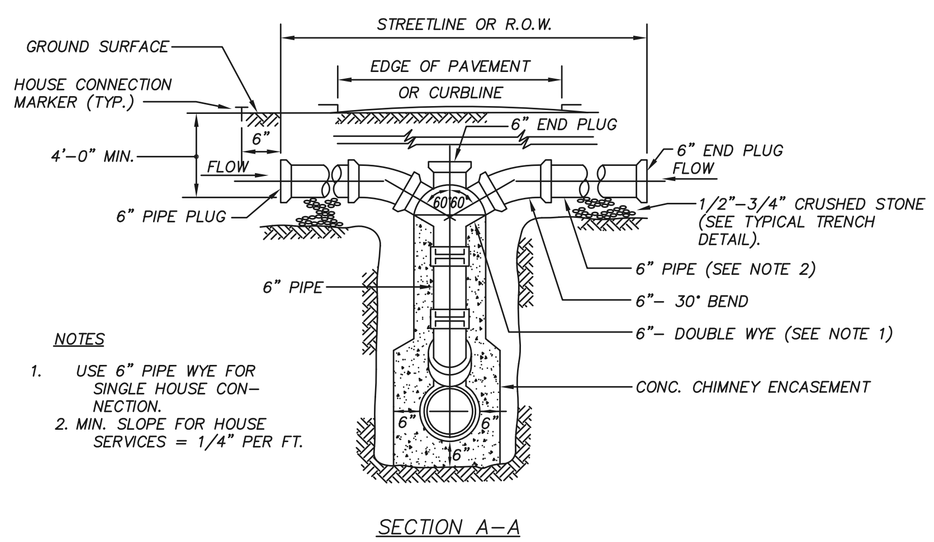

NOTES

1. USE 6" PIPE WYE FOR SINGLE HOUSE CON–NECTION.
2. MIN. SLOPE FOR HOUSE SERVICES = 1/4" PER FT.

TYPICAL HOUSE SERVICE CONNECTION & CHIMNEY DETAIL

(FOR MAIN SEWER OVER 8'–0" DEEP)
NOT TO SCALE

NOTES

1. ALL CONSTRUCTION SHALL CONFORM TO THE TOWN OF BELLINGHAM PLANNING BOARD RULES AND REGULATIONS AND DEPARTMENT OF PUBLIC WORKS STANDARDS AND DETAILS
2. SEWER SERVICES SHALL BE LAID AT LEAST 10'–0" HORIZONTALLY FROM WATER LINES AND SERVICES OR FOLLOW "DEP 2001 GUIDELINES AND POLICIES DOE PUBLIC WATER SYSTEMS" REGARDING VERTICAL SEPARATION. WATER PIPE CROSSINGS MUST PROVIDE A 0'–18" VERTICAL SEPARATION AND FOLLOW "DEP 2001 GUIDELINES AND POLICIES FOR PUBLIC WATER SYSTEMS".
3. NO BACKFILL WHAT–SO–EVER SHALL BE PLACED UNTIL PERMITTED BY THE TOWN ENGINEER OR HIS/HER AGENT.
4. MAXIMUM TRENCH WIDTH SHALL BE THE PIPE DIAMETER PLUS 2'–0".
5. LEDGE, ROCK, BOULDERS AND LARGE STONES SHALL BE REMOVED TO PROVIDE A MINIMUM CLEARANCE OF 0'–6" BELOW AND ON EACH SIDE OF THE PIPE.
6. SEWER SERVICES SHALL BE BEDDED ON A MINIMUM OF 0'–4" THOROUGHLY COMPACTED GRANULAR BEDDING CONSISTING OF 3/4" CRUSHED STONE M.H.D. (M2.01.4).
7. SEWER SERVICES SHALL HAVE A MINIMUM DIAMETER OF 0'–6" AND A MINIMUM SLOPE OF 2.0% (FT/FT).
8. THE SIDES OF THE SERVICES SHALL BE BACKFILLED AND HAND TAMPED. INITIAL BACKFILL MATERIAL SHALL CONTAIN NO STONES LARGER THAN 0'–3".
9. DEBRIS, FROZEN MATERIAL, LARGE CLODS OR STONES, ORGANIC MATTER, OR OTHER MATERIAL DEEMED UNSUITABLE BY THE ENGINEER SHALL NOT BE USED AS BACKFILL WITHIN TWO (2) FEET OF THE TOP OF THE PIPE.
10. SEWER SERVICES SHALL HAVE A MINIMUM COVER OF 4'–0" FROM THE TOP OF THE PIPE. SERVICES UNDER PAVED SURFACES OR SIDEWALKS SHALL BE FORMED OF SUCCESSIVE LAYERS NOT MORE THAN ONE (1) FOOT IN DEPTH, UNIFORMLY DISTRIBUTED AND EACH LAYER THOROUGHLY COMPACTED TO NOT LESS THAN 95% OF THE MAXIMUM DRY DENSITY OF THE MATERIAL. JACKING IS NOT ALLOWED.
11. NO PUDDLING OR JETTING IS ALLOWED WITHIN THE PUBLIC LAYOUT WITHOUT WRITTEN PERMISSION OF THE TOWN ENGINEER.

DETAILS

REVISIONS

No.		DESCRIPTION
1	04/02/2024	WETLAND DELINEATION
2	07/15/2024	PLG BRD ENG COMMENTS
3	09/26/2024	NEW ROAD LAYOUT (LAKE ST)
4	01/30/2025	PLG BRD COMMENTS/129 UNITS
5	04/09/2025	PLG BRD COMMENTS - BSC 3/19/25
6	04/28/2025	PLG BRD COMMENTS

SITE DEVELOPMENT PLAN
"PROSPECT HILL VILLAGE"
A MULTI-UNIT RESIDENTIAL DEVELOPMENT
BELLINGHAM, MASSACHUSETTS

PREPARED FOR:
WALL STREET DEVELOPMENT CORP.
P.O. BOX 272
WESTWOOD, MASSACHUSETTS

GLM Engineering Consultants, Inc.
19 EXCHANGE STREET
HOLLISTON, MA 01746
P: 508–429–1100
F: 508–429–7160
www.GLMengineering.com

JOB No.	16,590
DATE:	NOV. 30, 2023
SCALE:	1"=60'
SHEET:	41 of 43
PLAN #:	27,871

NOTES:

1. ALL NEW WATER MAINS FROM 6" THRU 12" DIAMETER SHALL BE DUCTILE IRON PRESSURE CLASS 350 PIPE.
2. TEFLON TAPE SHALL BE REQUIRED FOR ALL DIRECT TAPS
3. NO DIRECT TAPS GREATER THAN 1" SHALL BE ALLOWED ON 6" THRU 12" DIAM. PIPE
4. ANY BRANCH OR SERVICES LARGER THAN 1" MUST BE ACCOMPLISHED BY INSTALLATION OF APPROPRIATE DUCTILE IRON FITTING

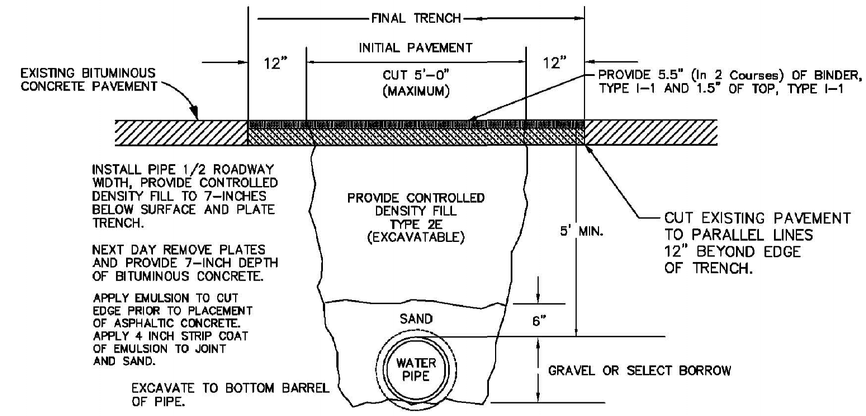

TYPICAL TRENCH RESURFACING
IN STATE HIGHWAY & ON MAIN ROADS

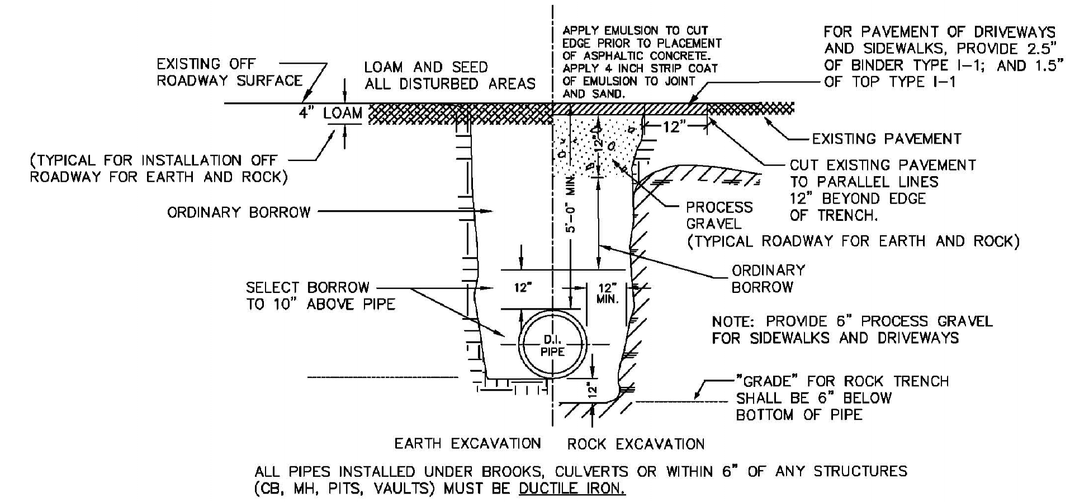

ALL PIPES INSTALLED UNDER BROOKS, CULVERTS OR WITHIN 6" OF ANY STRUCTURES (CB, MH, PITS, VAULTS) MUST BE DUCTILE IRON.

TYPICAL TRENCH SECTION
FOR DUCTILE IRON WATER MAINS

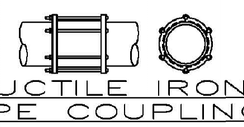

DUCTILE IRON
PIPE COUPLING

STYLE 501 & RC 501
BY ROMAC INDUSTRIES OR EQUIVALENT
TO BE USED FOR PIPE REPAIRS,
"CUT-INS", COUPLING DIFFERENT
TYPES OF PIPE, & CORRECTING
MISSALIGNED PIPE
(DI to C-900; DI to AC; C-900 to AC)

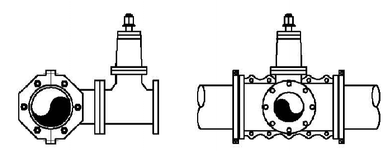

TAPPING SLEEVE & VALVE

MJ TAPPING SLEEVE WITH MUELLER T-2360 (OR EQUIVALENT)
RESILIENT WEDGE TAPPING VALVE - MJ x FL ENDS
OPEN LEFT

NOTE:
ALL MAIN LINE VALVES - (OPEN LEFT, NON RISING STEM)
SIZES 3" TO 12" - (GATE VALVES)
SIZES GREATER THAN 12" - (BUTTERFLY VALVES)
MUELLER - KENNEDY - DARLING - EPOXY COATED
MUELLER RESILIENT SEAT EPOXY COATED, AWWA APPROVED

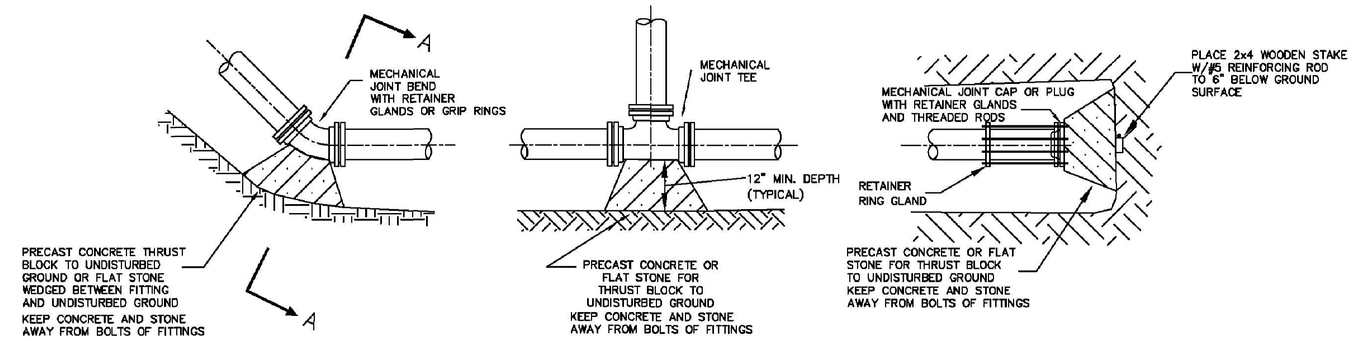

TYPICAL THRUST BLOCK DETAILS

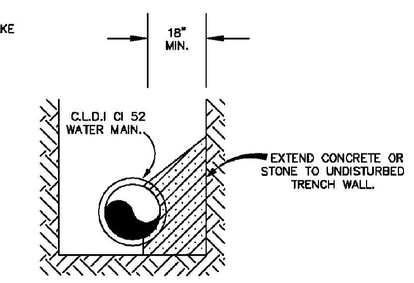

SECTION A-A
NOT TO SCALE

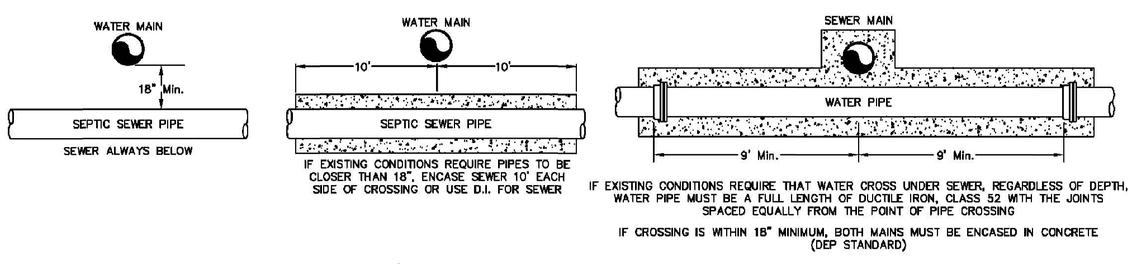

WATER / SEWER CROSSINGS

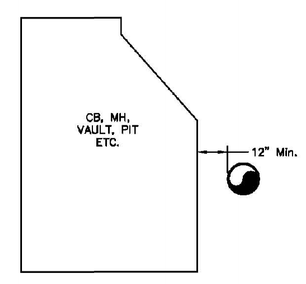

WATER PIPE
CLEARANCE TO STUCTURES

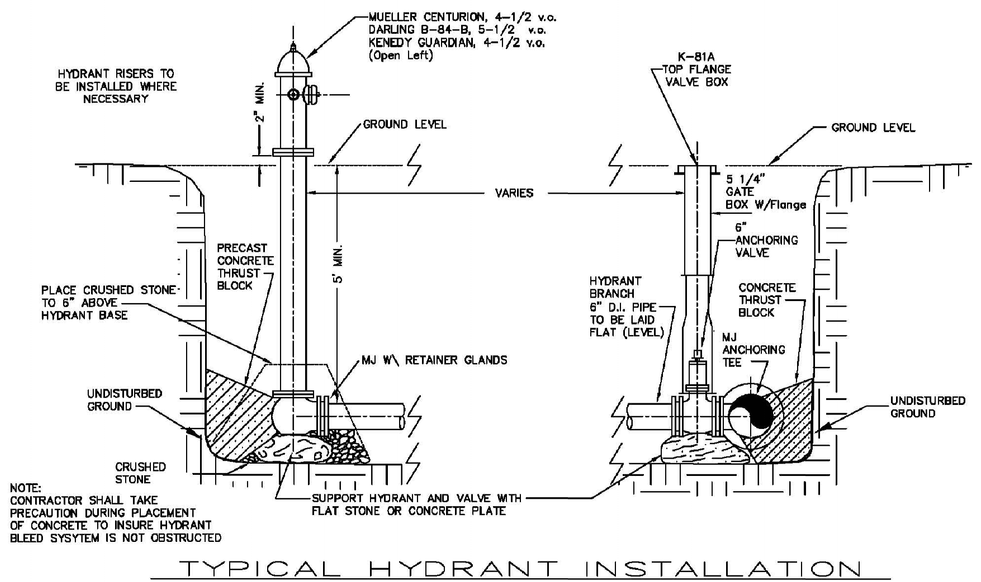

NOTE:
CONTRACTOR SHALL TAKE PRECAUTION DURING PLACEMENT OF CONCRETE TO INSURE HYDRANT BLEED SYSTEM IS NOT OBSTRUCTED

TYPICAL HYDRANT INSTALLATION

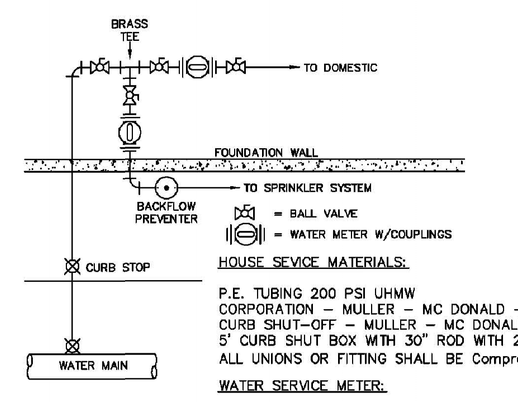

HOUSE SEVICE MATERIALS:

P.E. TUBING 200 PSI UHMW
CORPORATION - MULLER - MC DONALD - RED HED - CC x Compression
CURB SHUT-OFF - MULLER - MC DONALD - RED HED - Compression X Compresssion (No Drains)
5' CURB SHUT BOX WITH 30" ROD WITH 2 HOLE COVER
ALL UNIONS OR FITTING SHALL BE Compression X Compression. UNIONS MUST BE AVOIDED ON NEW SERVICE LINES

WATER SERVICE METER:

SENSUS - 5/8 X 3/4 SRII ECR/DM GALLONS with MXU Transmitter
METERS SHALL BECOME THE PROPOERTY OF THE TOWN OF BELLINGHAM.

METER FITTINGS:

WATTS BALL VALVE - TEFLON COATED
STRAIGHT METER COUPLING - MULLER - MC DONALD - RED HED
BENDS - Compression x MALE THREAD

WATER SERVICE CONNECTION
WITH
SECOND METER
(LAWN SPRINKLER SYSTEMS)

TEFLON TAPE SHALL BE ADDED TO ALL NEW WATER SERVICES

ALL NEW WATER MAINS SHALL BE PRESSURE CLASS 350 DUCTILE IRON EFFECTIVE MARCH 1, 2014

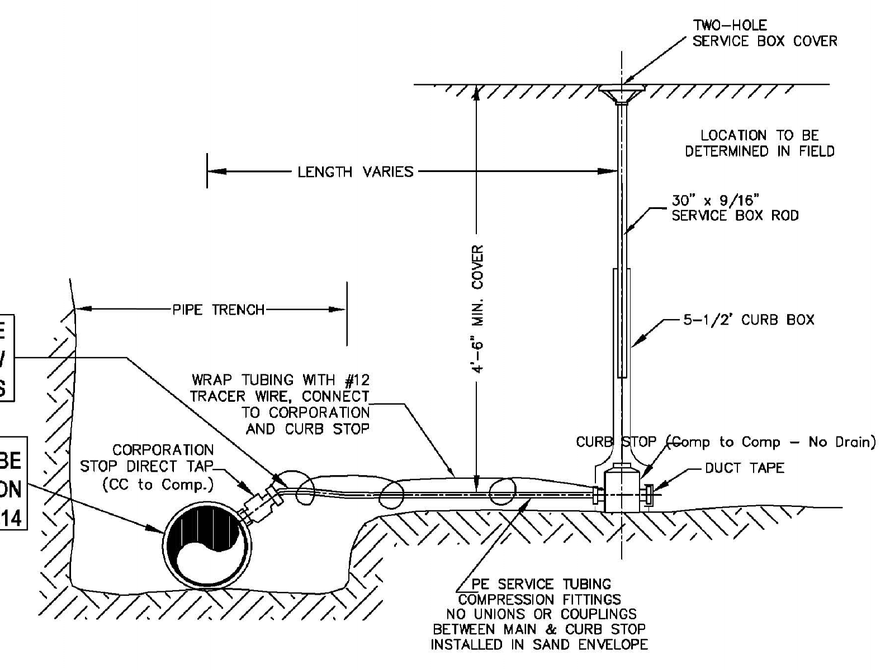

TYPICAL SERVICE CONNECTION

SEE SPEC. SHEET

DETAILS

REVISIONS

No.		DESCRIPTION
1	04/02/2024	WETLAND DELINEATION
2	07/15/2024	PLG BRD ENG COMMENTS
3	09/26/2024	NEW ROAD LAYOUT (LAKE ST)
4	01/30/2025	PLG BRD COMMENTS/129 UNITS
5	04/09/2025	PLG BRD COMMENTS - BSC 3/19/25
6	04/28/2025	PLG BRD COMMENTS

SITE DEVELOPMENT PLAN
"PROSPECT HILL VILLAGE"
A MULTI-UNIT RESIDENTIAL DEVELOPMENT
BELLINGHAM, MASSACHUSETTS

PREPARED FOR:
WALL STREET DEVELOPMENT CORP.
P.O. BOX 272
WESTWOOD, MASSACHUSETTS

GLM Engineering Consultants, Inc.
19 EXCHANGE STREET
HOLLISTON, MA 01746
P: 508-429-1100
F: 508-429-7160
www.GLMengineering.com

JOB No.	16,590
DATE:	NOV. 30, 2023
SCALE:	1"=60'
SHEET:	42 of 43
PLAN #:	27,871

DEWATERING:
PUMPING AND DEWATERING THE EXCAVATION AREAS SHALL BE DONE IN A MANNER WHICH WILL NOT DISCHARGE ANY SILT SEDIMENT INTO A RESOURCE AREA. DISCHARGES FROM A DEWATERING CONSTRUCTION PROCEDURE WILL BE FILTERED THROUGH A SILTATION BASIN AND/OR A SILT SOCK, CONSTRUCTED UPLAND FROM THE WORK SITE. THE SILTATION BASIN SHALL BE A DEPRESSION SURROUNDED BY A HAYBALE DIKE OR SILT FENCE. OVERFLOW FROM THE SILTATION BASIN SHALL BE PLANNED TO BE LOCATED OVER A THICKLY AND NATURALLY MULCHED UPLAND AREA. ALL BASINS SHALL BE LOCATED AT LEAST 100 FEET UPSLOPE FROM ANY RESOURCE AREA.

NOTES:

1. ALL GUARDRAIL SHALL BE INSTALLED IN ACCORDANCE WITH THE LATEST MassDOT CONSTRUCTION STANDARDS.
2. GUARDRAIL SHALL BE GALVANIZED STEEL 'W' BEAM HIGHWAY GUARD WITH GALVANIZED STEEL POSTS OR COR-TEN WEATHERING STEEL BEAM HIGHWAY GUARD WITH TREATED WOOD POSTS. THE TYPE OF GUARDRAIL TO BE USED WILL BE SPECIFIED BY THE BELLINGHAM DPW.

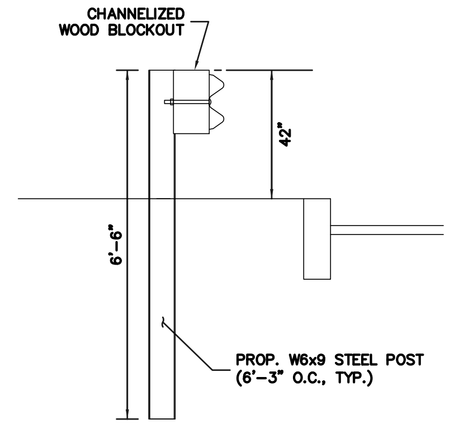

STEEL POST SHOWN

GUARDRAIL DETAIL

NOT TO SCALE

NOTES:
1. CULVERT DESIGN SPECIFICATIONS:
   - ACI 318 & AASHTO
   MATERIAL PROPERTIES:
   - Concrete – 5000 psi @ 28 days
   - Steel Reinforcement
     Rebar ASTM A-615 Grade 60
     Welded Wire Fabric ASTM A-185 Grade 65
2. INTERLOCKING BLOCK WALL TO BE DESIGNED BY STRUCTURAL ENGINEER.

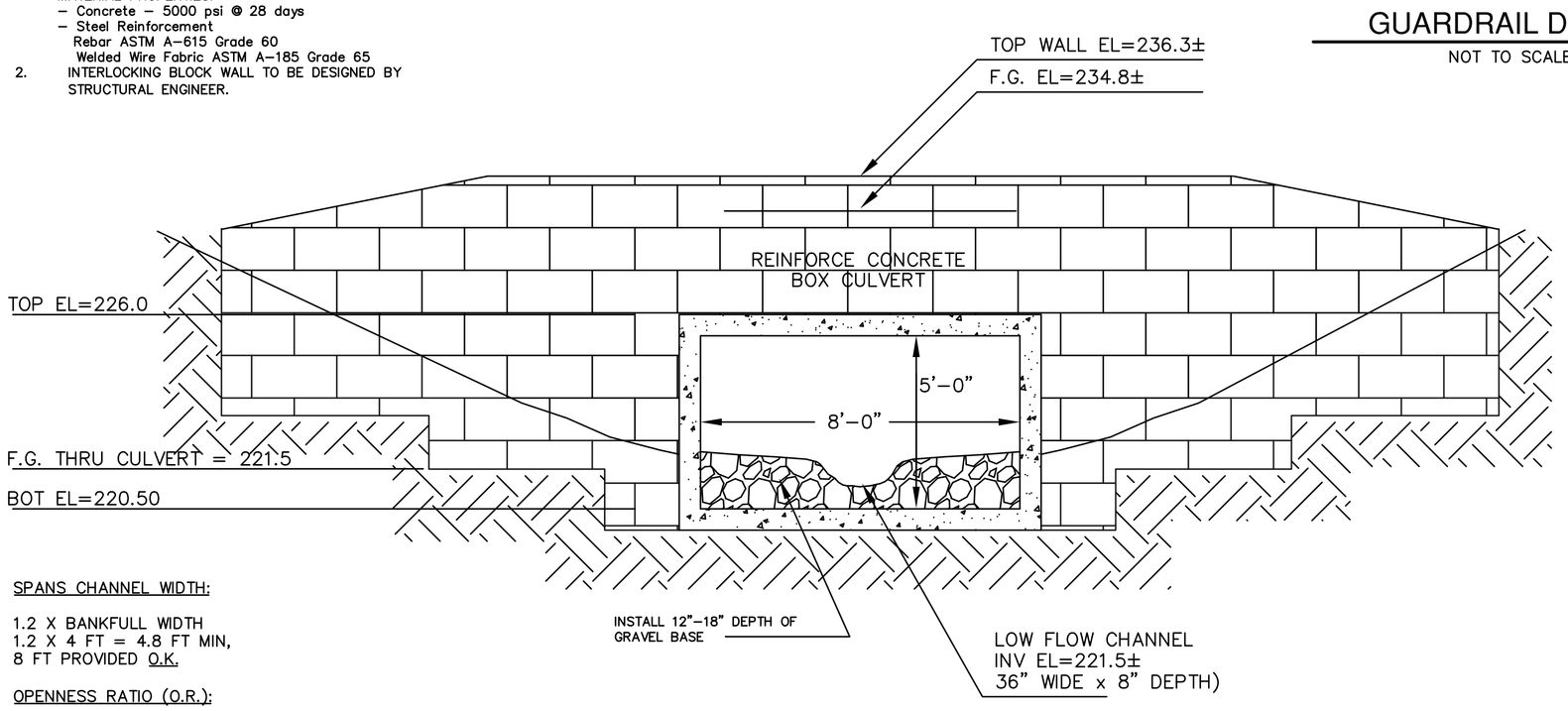

SPANS CHANNEL WIDTH:

1.2 X BANKFULL WIDTH
1.2 X 4 FT = 4.8 FT MIN,
8 FT PROVIDED O.K.

OPENNESS RATIO (O.R.):

MIN. REQUIRED O.R. = 0.82 FEET
O.R. = (HEIGHT X WIDTH)/LENGTH

AVG. HEIGHT = 4.5 FT
WIDTH = 8 FT
LENGTH = 42 FT

O.R. = (8 X 4.5)/42 = 0.86 FT O.K.

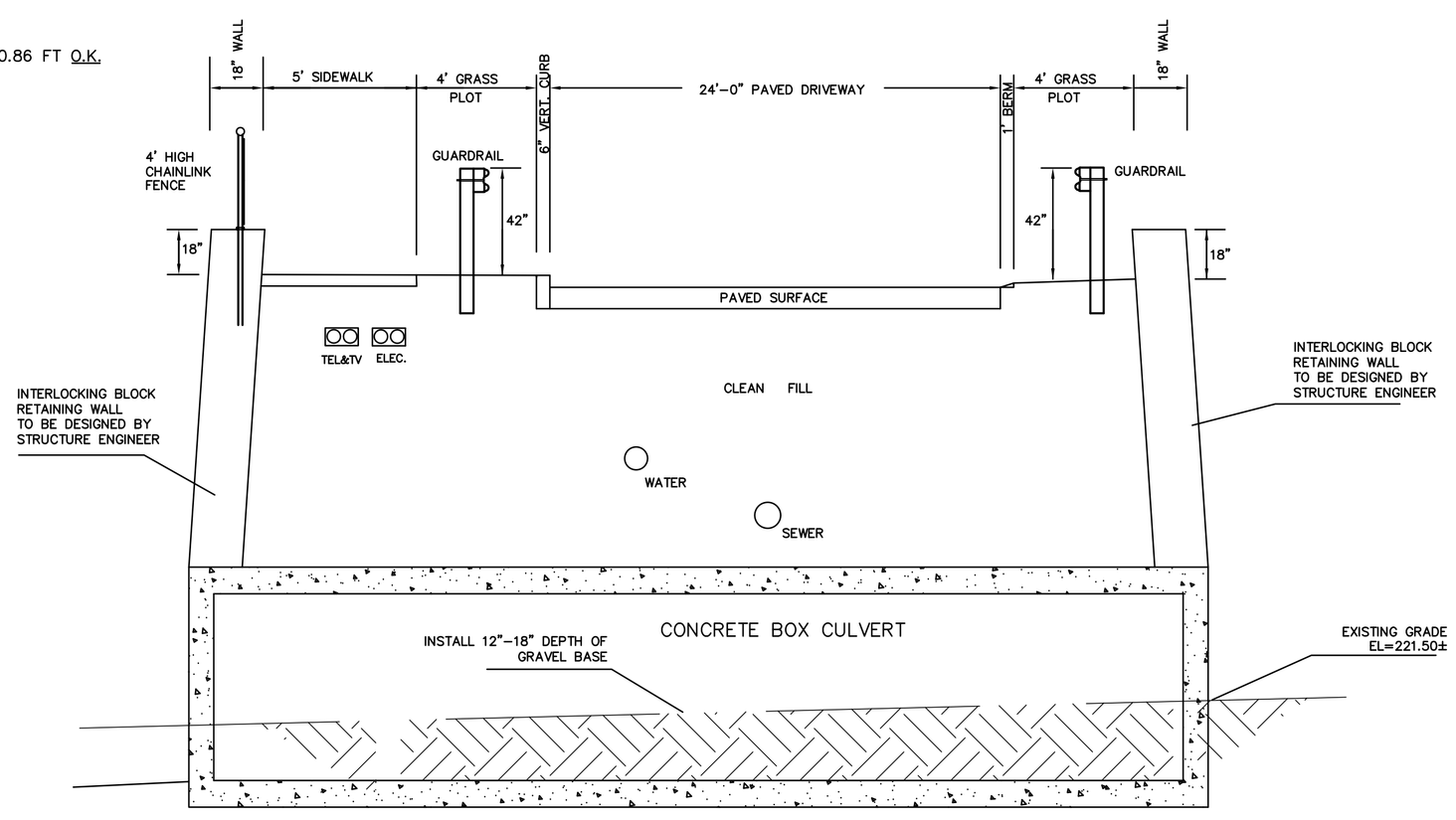

WETLAND CROSSING DETAIL

NOT TO SCALE

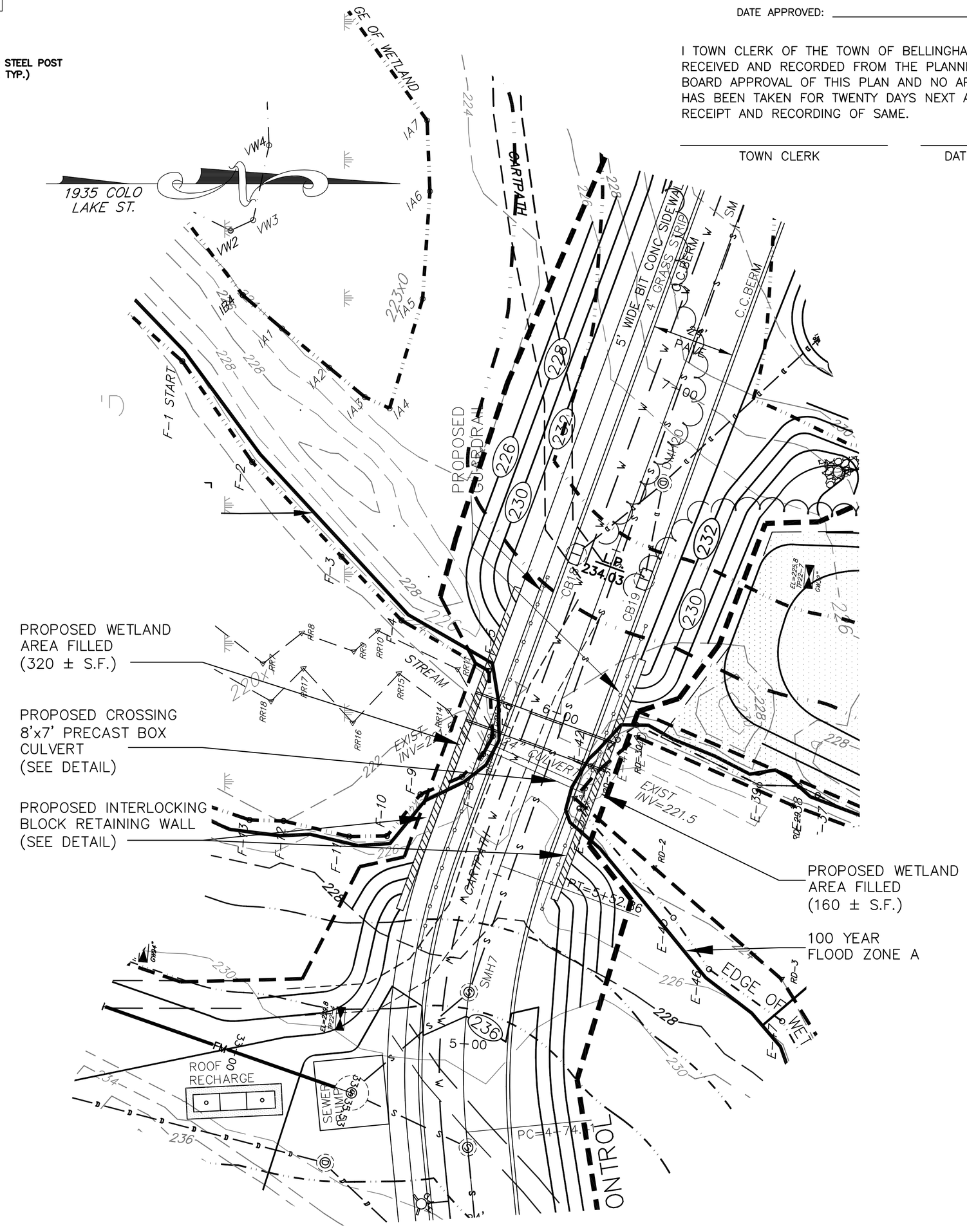

PLAN VIEW

1" = 20'

APPROVED BY THE BELLINGHAM PLANNING BOARD:

DATE APPROVED: _____

I TOWN CLERK OF THE TOWN OF BELLINGHAM RECEIVED AND RECORDED FROM THE PLANNING BOARD APPROVAL OF THIS PLAN AND NO APPEAL HAS BEEN TAKEN FOR TWENTY DAYS NEXT AFTER RECEIPT AND RECORDING OF SAME.

TOWN CLERK _____ DATE _____

REVISIONS

No.	DATE	DESCRIPTION
1	04/02/2024	WETLAND DELINEATION
2	07/15/2024	PLG BRD ENG COMMENTS
3	09/26/2024	NEW ROAD LAYOUT (LAKE ST)
4	01/30/2025	PLG BRD COMMENTS/129 UNITS
5	04/09/2025	PLG BRD COMMENTS - BSC 3/19/25
6	04/28/2025	PLG BRD COMMENTS

SITE DEVELOPMENT PLAN
"PROSPECT HILL VILLAGE"
A MULTI-UNIT RESIDENTIAL DEVELOPMENT
BELLINGHAM, MASSACHUSETTS

PREPARED FOR:
WALL STREET DEVELOPMENT CORP.
P.O. BOX 272
WESTWOOD, MASSACHUSETTS

GLM Engineering Consultants, Inc.
19 EXCHANGE STREET
HOLLISTON, MA 01746
P: 508-429-1100
F: 508-429-7160
www.GLMengineering.com

JOB No.	16,590
DATE:	November 30, 2023
SCALE:	1"= 20'
SHEET:	43 of 43
PLAN #:	27,871

WETLAND REPLICATION PLAN

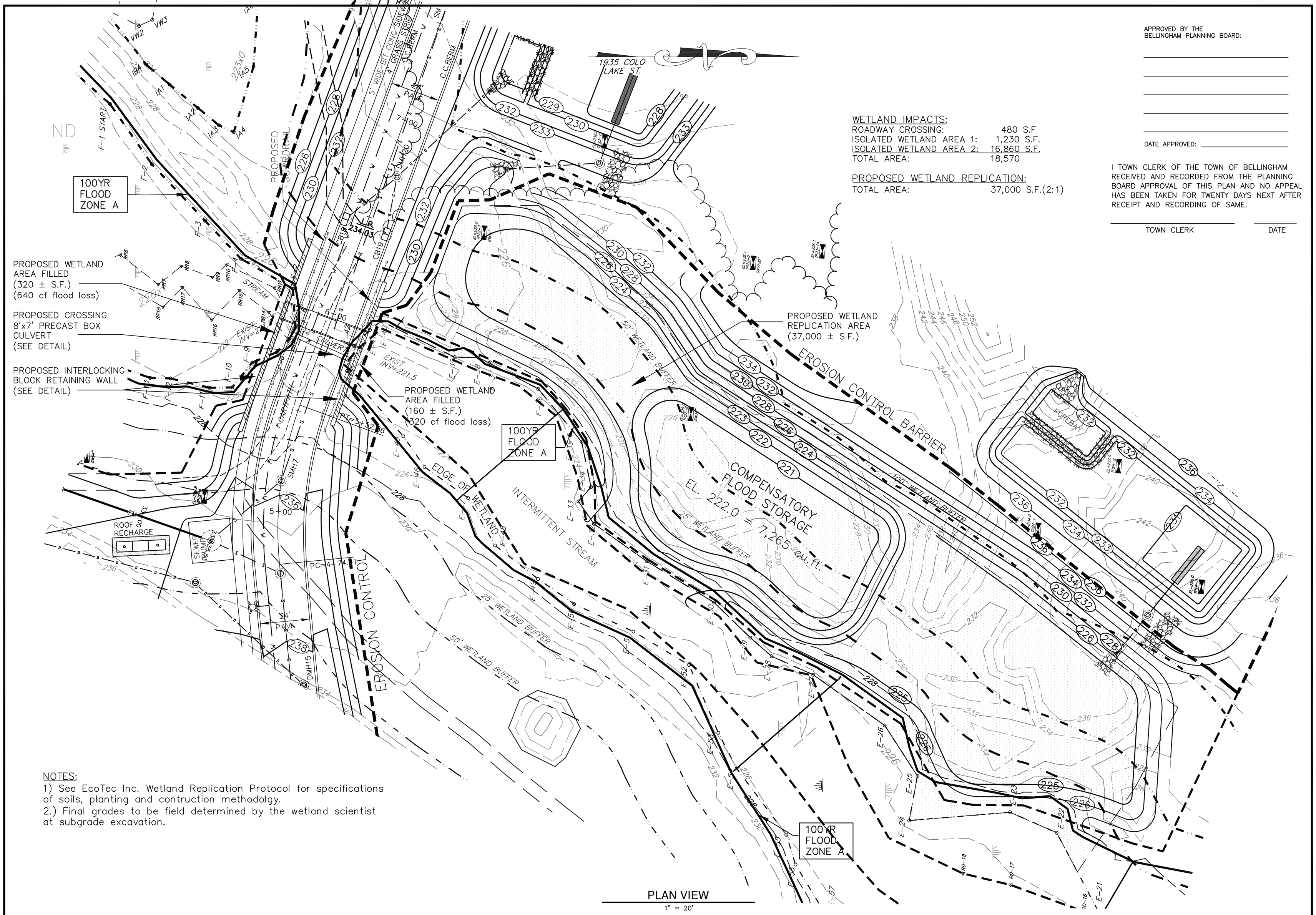

WETLAND IMPACTS:

ROADWAY CROSSING:	480 S.F
ISOLATED WETLAND AREA 1:	1,230 S.F.
ISOLATED WETLAND AREA 2:	16,860 S.F.
TOTAL AREA:	18,570

PROPOSED WETLAND REPLICATION:

TOTAL AREA:	37,000 S.F.(2:1)

APPROVED BY THE BELLINGHAM PLANNING BOARD:

DATE APPROVED: _____

I TOWN CLERK OF THE TOWN OF BELLINGHAM RECEIVED AND RECORDED FROM THE PLANNING BOARD APPROVAL OF THIS PLAN AND NO APPEAL HAS BEEN TAKEN FOR TWENTY DAYS NEXT AFTER RECEIPT AND RECORDING OF SAME.

TOWN CLERK _____ DATE _____

NOTES:
1) See EcoTec Inc. Wetland Replication Protocol for specifications of soils, planting and contruction methodolgy.
2.) Final grades to be field determined by the wetland scientist at subgrade excavation.

PLAN VIEW
1" = 20'

WETLAND REPLICATION PLAN

REVISIONS

No.	DATE	DESCRIPTION
1	04/02/2024	WETLAND DELINEATION
2	07/15/2024	PLG BRD ENG COMMENTS
3	09/26/2024	NEW ROAD LAYOUT (LAKE ST)
4	01/30/2025	PLG BRD COMMENTS/129 UNITS
5	01/30/2025	PLG BRD COMMENTS - BSC 3/19/25
6	04/28/2025	PLG BRD COMMENTS

SITE DEVELOPMENT PLAN "PROSPECT HILL VILLAGE" A MULTI-UNIT RESIDENTIAL DEVELOPMENT BELLINGHAM, MASSACHUSETTS

PREPARED FOR:
WALL STREET DEVELOPMENT CORP.
P.O. BOX 272
WESTWOOD, MASSACHUSETTS

GLM Engineering Consultants, Inc.
19 EXCHANGE STREET
HOLLISTON, MA 01746
P: 508-429-1100
F: 508-429-7160
www.GLMengineering.com

JOB No.	16,590
DATE:	November 30, 2023
SCALE:	1"= 20'
SHEET:	SUP-A
PLAN #:	27,871

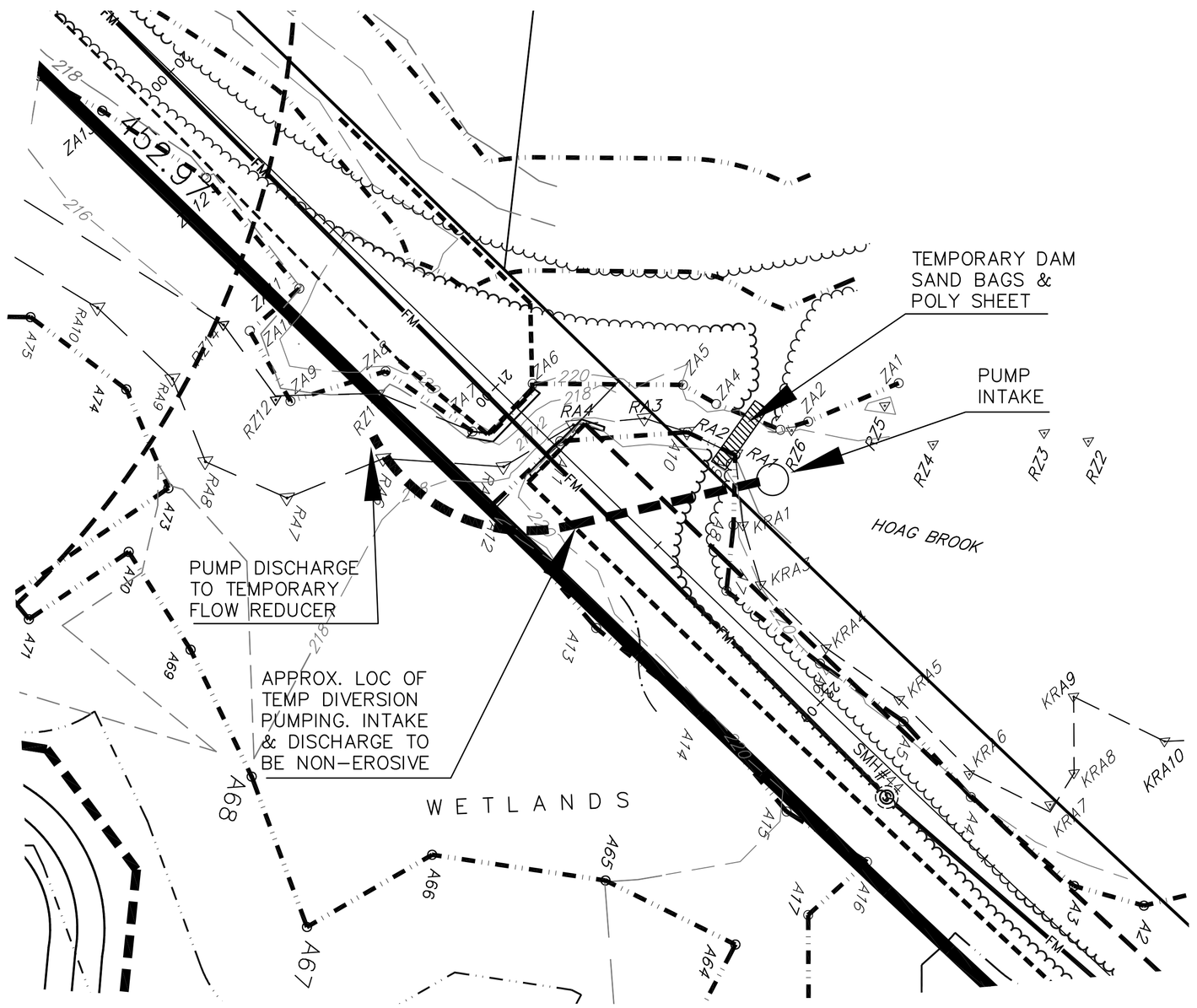

HOAG BROOK CROSSING

1" = 20'

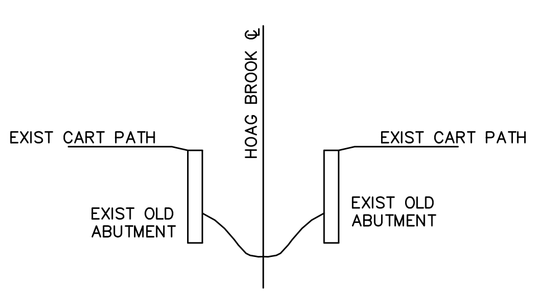

HOAG BROOK EXISTING CONDITIONS

N.T.S.

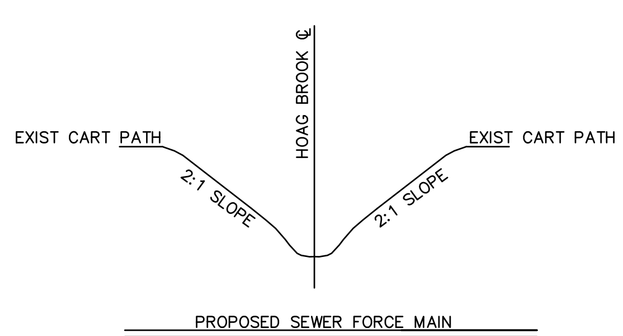

HOAG BROOK POST CONDITIONS

N.T.S.

PROSPECT HILL VILLAGE - BELLINGHAM, MA
PROPOSED CONSTRUCTION SEQUENCE
CONSTRUCTION OF CROSS-COUNTRY SEWER FORCE MAIN
VIA RAILWAY TO BLACKMAR STREET WITH STREAM CROSSING
AND GRAVITY SEWER TO DUPRE ROAD PUMP STATION
DEP FILE NO. 108-968

PREPARED BY WALL STREET DEVELOPMENT
REVISED APRIL 21, 2025

The Project calls for the installation of a sewer force main from the development site cross-country in the former Attleboro and Woonsocket Railway existing rail bed (the "Railway") out to Town Way (unpaved road) and Blackmar Street. The sewer force main to be installed is shown on Sheets S-1 to S-4 of the site development plan. The proposed sewer force main will be installed from the sewer pump station down the Railway to the south out through Blackmar Street to the high point near Lakeview Avenue. The sewer will then transition to a gravity sewer to the Dupre Sewer Pump Station on Cross Street.

The work to install the sewer force main will include work within the buffer zone, degraded Riverfront Area, and a crossing of Hoag Brook (within the portion of the brook found to be an intermittent stream). The proposed gravity sewer is located entirely within existing paved roadways. The installation will follow the construction sequencing outlined below:

1. Stake the Limits of Work: The limits of work off the paved roadway are to be staked out just prior to the time of commencing construction. The stake out is to ensure that there will be no unauthorized wetland intrusion.

2. Tree and Brush Removal: Limited tree and brush in the work area, including the railway and side slopes, as required, are to be cut at the base and removed to the limit of the approved erosion control barriers in jurisdictional areas.
3. Install Erosion Controls: Place and stake siltation control barriers at staked limit of work for erosion control, in areas designated on the plans.

4. Sewer Line Stake-out: The centerline of the proposed sewer line will be staked with offset stakes in unpaved areas, and painted on the paved roadway sections.

5. Work order: Work will begin at the project development site at the north end of the proposed sewer, and will progress to the south. A trench box will be employed in compliance with OSHA standards, which will minimize the width of the required excavation. Pipe bedding, pipe, and manholes will be transported to the work area along the sewer main route. Pipe bedding will be placed directly into the trench and the limited excess soils (the volume of the pipe, bedding, and manholes) will be removed from the work area and reused at an appropriate location. Not more than one pipe length of trench will be left open during non-work hours. All surfaces will be restored to existing condition; however the railroad bed surface may be modified (at the same elevation) for use as a walking path (not currently proposed).

6. Force Main Installation: The proposed sewer force main will be a 4' diameter SDR21 pipe with pipe lengths varying from 10-feet to 20-feet in length. As each pipe segment is installed, it will be placed in appropriate bedding materials as indicated on the plans in accordance with standard construction practice, and joints sealed as required. Backfill soil will be from the excavation for the next pipe segment, to minimize the need for soil removal.

7. Hoag Brook Stream Crossing: The sewer force main installation will necessitate temporary impacts to Hoag Brook as the force main crosses below the bottom of the brook. The work is proposed to cross a segment of the brook with no associated BVW at the location of old bridge abutments/retaining walls. The work will be temporary in nature and conducted during a no-flow or low-flow period. Any flow that is present will be halted with a sandbag dike upstream of the proposed stream crossing location, as indicated on the plans, where a large storage volume exists above the channel constriction just upstream. The materials and equipment necessary to complete the stream crossing will staged and ready nearby, prior to installing the temporary dam. The goal is to conduct the work quickly, and utilize the available storage immediately upstream. If required, any channel flow will be pumped around the work area in accordance with best management practices. This will include:
   a. Pump(s) staged in the upland, on a secure flat location;
   b. Pump intake(s) to be positioned to not remove or destabilize and sediment;
   c. Pump discharge(s) to be within a temporary flow dissipating structure (e.g. a perforated, stone-filled barrel) placed within the channel downstream of the work area;

   The affected bank and channel bottom will be stabilized with stone at the completion of the work, to match existing channel contours.

8. Surface Finish: The final surface treatment of the sewer easement along the railway will be at the discretion of the Conservation Commission (i.e. gravel path, wood chips, etc.).

9. Gravity Sewer Work: The gravity sewer main will be an 8-inch SDR35 sewer pipe. As the work progresses to the gravity portion of the sewer installation within the paved public way of Blackmar Street, the work will include pipe installation with sewer manholes, backfill, compaction of the sewer trench and road restoration in compliance with Town of Bellingham specifications. Ther gravity sewer includes pipe installation under the existing peters River box culvert under Cross Street. The sewer has been designed to avoid the box culvert, and no alteration to the culvert or Peters River will occur.

10. Completion: Upon completion of the sewer installation, the Railway may be stabilized as a future walking path, at the discretion of the Commission and/or Planning Board.

Note: Installation of a wooden bridge at the existing Hoag Brook stream crossing/abutment may be installed at the Commission's discretion.

Dewatering:
If trench dewatering is required at any point along the proposed sewer, water will be pumped from the trench and discharged outside of wetlands and buffer zones to ensure a safe work area. Soils at the site are highly permeable sand and gravel, and infiltration can readily occur. Management of pumped water can be accomplished by either:
1. Direct pumping to a secure upland area for infiltration; or
2. Pumping to a tanker truck or settling tank (e.g. frac tank) to allow settling of suspended solids. Water will be removed from the frac tank and discharged outside of wetlands jurisdiction, where it can infiltrate in a non-erosive manner. This may involve the use of a tanker truck, which will remove water from the frac tank and discharge the water for infiltration outside of wetlands jurisdiction (e.g., to an excavated infiltration pit inside the former gravel pit).

Any water discharge will be monitored to ensure that infiltration and any deposition of suspended soils occurs outside of wetlands jurisdiction.

CONSTRUCTION SPECIFICATIONS

APPROVED BY THE
BELLINGHAM PLANNING BOARD:

DATE APPROVED:

I TOWN CLERK OF THE TOWN OF BELLINGHAM RECEIVED AND RECORDED FROM THE PLANNING BOARD APPROVAL OF THIS PLAN AND NO APPEAL HAS BEEN TAKEN FOR TWENTY DAYS NEXT AFTER RECEIPT AND RECORDING OF SAME.

TOWN CLERK DATE

REVISIONS

No.	DATE	DESCRIPTION
1	04/02/2024	WETLAND DELINEATION
2	07/15/2024	PLG BRD ENG COMMENTS
3	09/26/2024	NEW ROAD LAYOUT (LAKE ST)
4	01/30/2025	PLG BRD COMMENTS/129 UNITS
5	01/30/2025	PLG BRD COMMENTS - BSC 3/19/25
6	04/28/2025	PLG BRD COMMENTS

SITE DEVELOPMENT PLAN
"PROSPECT HILL VILLAGE"
A MULTI-UNIT RESIDENTIAL DEVELOPMENT
BELLINGHAM, MASSACHUSETTS

PREPARED FOR:
WALL STREET DEVELOPMENT CORP.
P.O. BOX 272
WESTWOOD, MASSACHUSETTS

GLM Engineering Consultants, Inc.
19 EXCHANGE STREET
HOLLISTON, MA 01746
P: 508-429-1100
F: 508-429-7160
www.GLMengineering.com

JOB No.	16,590
DATE:	November 30, 2023
SCALE:	1"= 20'
SHEET:	SUP-B
PLAN #:	27,871

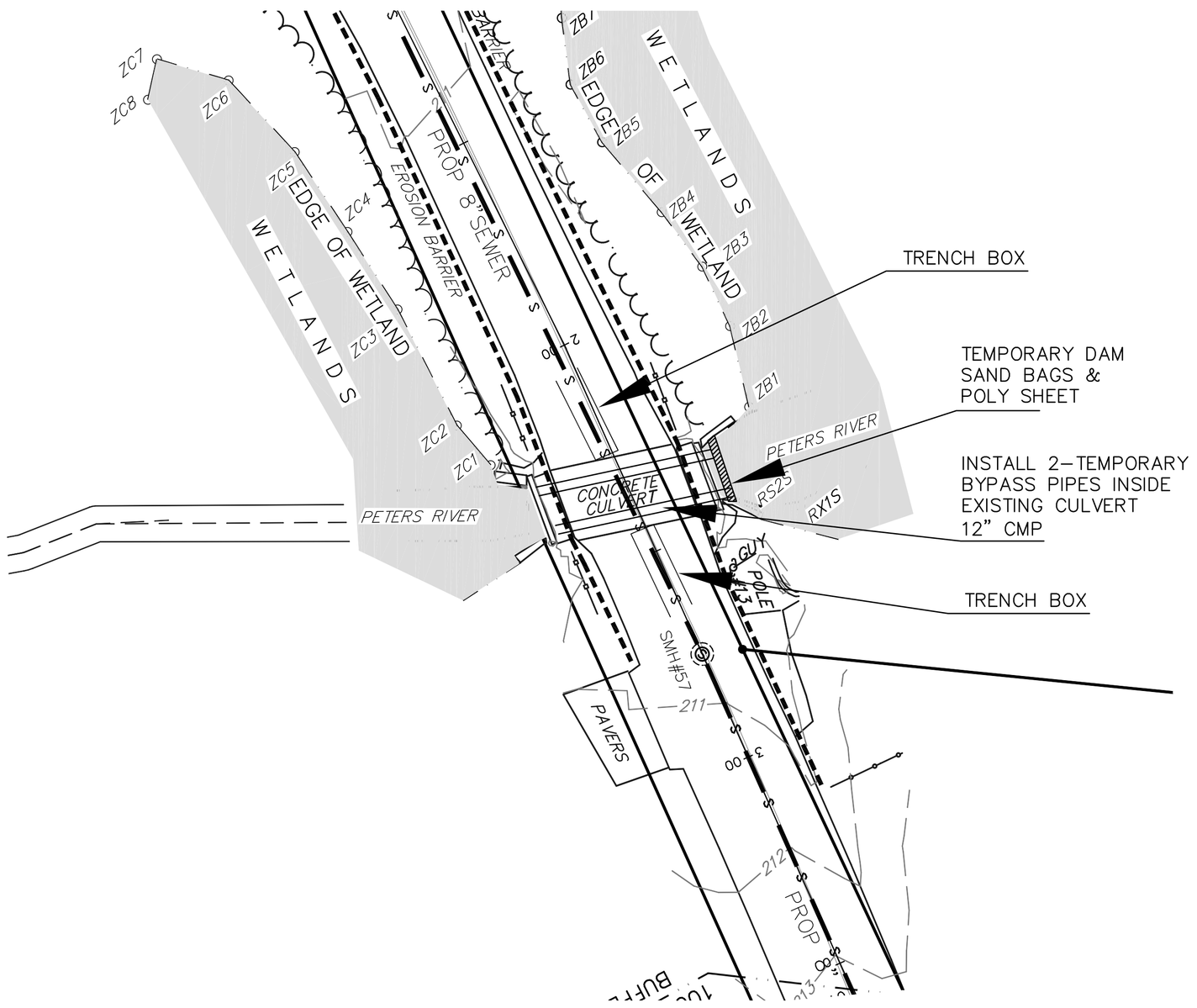

PETERS RIVER CROSSING

1" = 20'

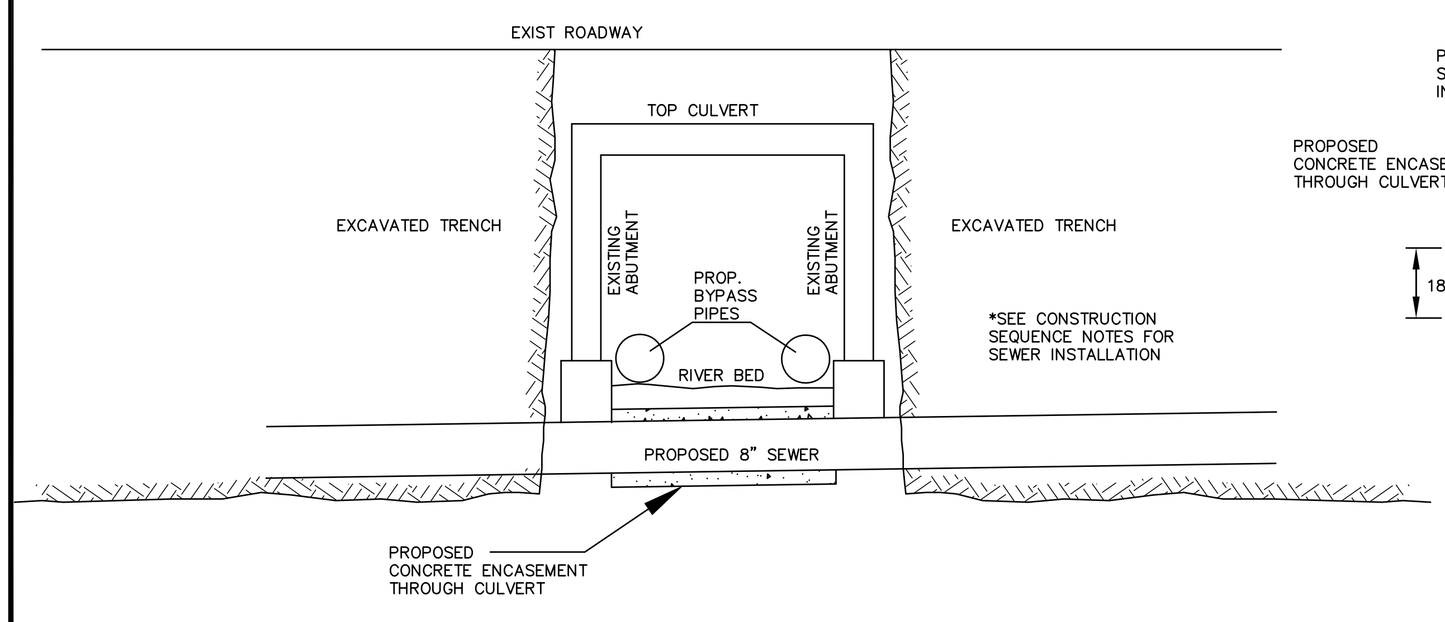

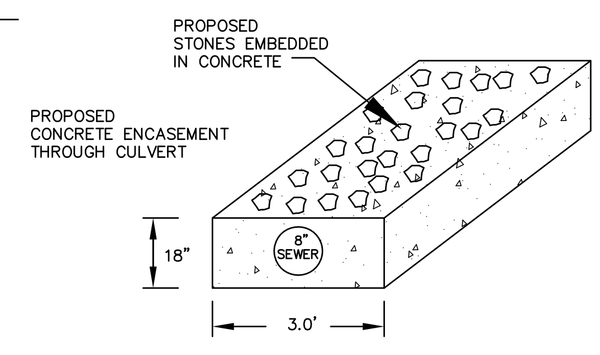

PETERS RIVER CONSTRUCTION DETAIL

N.T.S.

PROSPECT HILL VILLAGE - BELLINGHAM, MA
PROPOSED CONSTRUCTION SEQUENCE
CONSTRUCTION OF SEWER FORCE MAIN
AT PETERS RIVER
DEP FILE NO. 108-968

PREPARED BY WALL STREET DEVELOPMENT
REVISED APRIL 25, 2025

The Project calls for the installation of a sewer force main from the development site cross-country in the former Attleboro and Woonsocket Railway existing rail bed (the "Railway") out to Town Way (unpaved road) and Blackmar Street. The sewer force main to be installed is shown on Sheets S-1 to S-4 of the site development plan. The proposed sewer force main will be installed from the sewer pump station down the Railway to the south, out through Blackmar Street to the high point near Lakeview Avenue. The sewer will then transition to a gravity sewer to the Dupre Sewer Pump Station on Cross Street.

The work to install the sewer gravity main will include work within the buffer zone, degraded Riverfront Area, and a crossing under Peters River, within the paved Cross Street, where Peters River passes under Cross Street in a large rectangular box culvert.

The proposed work in the roadway will be coordinated with appropriate Town officials, including Public Works and Bellingham Police Department, to ensure that the work is conducted with safety to the public and in conformance with all local requirements.

The proposed gravity sewer route is located entirely within existing paved roadway. The installation will follow the construction sequencing outlined below:

1. Stake and/or paint the Limits of Work: The limits of work will be staked (offsets) or painted onto the roadway just prior to the commencing of construction.

2. Preconstruction meeting: Prior to this work, a preconstruction meeting with the local permitting, engineering, and public safety officials will be coordinated.

3. Install Erosion Controls: Place and stake siltation control barriers at staked limit of work for erosion control, in areas designated on the plans.

4. Gravity Sewer Work: The gravity sewer main will be an 8-inch SDR35 sewer pipe. The work will include pipe installation with sewer manholes, backfill, compaction of the sewer trench and road restoration in compliance with Town of Bellingham specifications. All construction materials will be transported to the work area on trucks using the public roads. All excess soils from the trench excavation will be placed into trucks and brought to the development site for use as common fill. The work area will be regularly swept and kept clean of soil and other debris.

5. Peters River Crossing: The gravity sewer includes pipe installation under the existing Peters River box culvert below Cross Street. The sewer has been designed to avoid the box culvert. Details of the proposed construction at the Peters River culvert follow.

   a. Timing: This work will be conducted during a summer-to-autumn low flow period, when substantial rainfall is not predicted for the anticipated length of time required to complete the pipe installation under Peters River. The work will only commence when all required equipment, personnel, and materials are available to complete the work in an efficient manner, and weather conditions are favorable.

   b. Access trench: The pipe trench will established on both sides of the existing box culvert, to allow access to both sides of the culvert;

   c. Flow diversion: Stream flow through the box culvert will be temporarily diverted by the placement of a sandbag and poly sheet dam at the upstream end of the culvert. Stream flow will be directed into one or more temporary, movable plastic pipes situated to capture flow at the upstream end of the culvert (at the temporary dam). The temporary pipe(s) will pass through the culvert and discharge within the existing stream channel to the stone channel substrate near the downstream end of the culvert. Pumping from the channel upstream of the culvert may also be employed. Pump intake and discharge hoses will be positioned as needed to prevent scour at both the intake and discharge. If pumping is utilized, a discharge flow dissipator will be employed to prevent scour.
   As an alternative to fully damming the channel, an internal temporary dike may be installed within the channel, parallel to stream flow, to contain stream flow to approximately one-third of the channel width, to allow a portion of the pipe installation outside the flowed portion, followed by the same process on the opposite side of the channel.

   d. Dewatering: If dewatering is required, water will be pumped from the sewer trench into a frac tank temporarily staged nearby, and/or directly into a tanker truck. As needed, water will be pumped from the frac tank into the tanker truck. The tanker truck will transport the collected water to the development site, where it will be discharged to a pit in high permeability soils, located outside of all wetlands and wetland buffer zones, to infiltrate.

   e. Sewer trench excavation: Outside the box culvert, the sewer trench will be excavated to appropriate depth using heavy equipment operated on the road surface. Inside the 3-sided box culvert, the trench will be hand dug;

   f. Pipe installation and encasement: To ensure long term stability of the sewer pipe under the stream, it is proposed to install the pipe, and then immediately encase it in concrete, with approximately 4-inches of concrete cover over and under the pipe, and an 18-inch wide bed of concrete. To provide a rough surface to minimize scour, and maintain channel consistency, stones from the existing channel substrate will be imbedded in the surface layer of the concrete (see plan detail);

Channel restoration: The stream channel within the work area will be restored with hand tools, to reestablish the channel topography and surface substrate to pre-work conditions. Flow will then be reestablished by slowly removing the temporary dam and gradually restoring flow to the channel.

CONSTRUCTION SPECIFICATIONS

APPROVED BY THE
BELLINGHAM PLANNING BOARD:

DATE APPROVED:

I TOWN CLERK OF THE TOWN OF BELLINGHAM RECEIVED AND RECORDED FROM THE PLANNING BOARD APPROVAL OF THIS PLAN AND NO APPEAL HAS BEEN TAKEN FOR TWENTY DAYS NEXT AFTER RECEIPT AND RECORDING OF SAME.

TOWN CLERK DATE

REVISIONS

No.	DATE	DESCRIPTION
1	04/02/2024	WETLAND DELINEATION
2	07/15/2024	PLG BRD ENG COMMENTS
3	09/26/2024	NEW ROAD LAYOUT (LAKE ST)
4	01/30/2025	PLG BRD COMMENTS/129 UNITS
5	01/30/2025	PLG BRD COMMENTS - BSC 3/19/25
6	04/28/2025	PLG BRD COMMENTS

SITE DEVELOPMENT PLAN
"PROSPECT HILL VILLAGE"
A MULTI-UNIT RESIDENTIAL DEVELOPMENT
BELLINGHAM, MASSACHUSETTS

PREPARED FOR:
WALL STREET DEVELOPMENT CORP.
P.O. BOX 272
WESTWOOD, MASSACHUSETTS

GLM Engineering Consultants, Inc.
19 EXCHANGE STREET
HOLLISTON, MA 01746
P: 508-429-1100
F: 508-429-7160
www.GLMengineering.com

JOB No.	16,590
DATE:	November 30, 2023
SCALE:	1"= 20'
SHEET:	SUP-C
PLAN #:	27,871

ENVIRONMENTAL CONSULTING SERVICES
100 Grove Street - Suite 203
Worcester, MA 01605
508-752-9666

Wetland Replication Protocol
Prospect Hill Village
Bellingham, MA
DEP File No. 105-940

Prepared by:
Paul J. McManus, SPWS
President
February 3, 2025: Rev April 21, 2025

Introduction: The proposed Prospect Hill Village townhouse development is depicted on the Plan set prepared by GLM Engineering Consultants Inc. ("GLM"). As detailed on the plans, including sheet SUP-A, Wetland Replication Plan, the proposed primary roadway into the project makes use of an existing gravel road that crosses a wetland system consisting of mapped Hoag Brook and an associated area of Bordering Vegetated Wetland ("BVW"). The Replication Plan identifies proposed BVW impacts at the existing/ proposed wetland crossing to be 480 sf (160 sf on north side of the crossing and 320 sf on south side). This calculation conservatively includes the defined stream channel.

The Massachusetts Wetland Regulations at 310 CMR 10.55(4)(b) state that discretionary wetland filling and replication may be allowed consistent with the criteria listed below ("and any additional, specific conditions the issuing authority deems necessary to ensure that the replacement area will function in a manner similar to the area that will be lost"). Although the project is filed as a "limited project" in accordance with 310 CMR 10.53(3)(e), which allows for potential deviation from the BVW replication provisions of the Regulations, the following criteria for discretionary BVW filling and replication are satisfied. Although it is never possible to fully replicate the horizontal configuration of a wetland crossing in a replication area, it is EcoTec's opinion that the proposed replication area complies with the BVW replication criteria listed below.

Note that the proposed replication area serves as mitigation for the BVW filling and for proposed filling of Isolated Vegetated Wetland ("IVW") located in the western portion of the site which is a remnant of past excavations in the former mining area. The BVW and IVW areas are described in a separate Performance Standards evaluation by EcoTec. Consistent with discussions on the site with BSC Group, the Commission's peer review consultant, mitigation for the proposed IVW filling has been paired with the smaller replication area required for BVW mitigation. Rather than replicate the poorly developed wetland conditions in the IVW, the replication proposed includes a layer of more productive topsoil, and includes a grading plan to provide a range of hydrologic conditions, including seasonal standing water, to enhance wildlife habitat.

The BVW replication area regulations at 310 CMR 10.55(4)(b) specify the following provisions for a replication area (adherence to the provisions is provided below each).

BVW Replication Regulatory Requirements and Project Conformance - From 310 CMR 10.55(4)(b):

1. *the surface of the replacement area to be created ("the replacement area") shall be equal to that of the area that will be lost ("the lost area");*
   - A larger area is proposed (2:1 for both IVW and BVW);
2. *the ground water and surface elevation of the replacement area shall be approximately equal to that of the lost area;*
   - The replication area has similar elevation (in part) to the BVW impact area, and provides for a wetter hydrology than the existing IVW, to enhance wetland function and wildlife habitat;
3. *the overall horizontal configuration and location of the replacement area with respect to the bank shall be similar to that of the lost area;*
   - The configuration and location of the replication is adjacent to Hoag Brook, which is similar to the BVW impact area, but the IVW is mitigated as BVW along the brook, rather than in the middle of the pit;
4. *the replacement area shall have an unrestricted hydraulic connection to the same water body or waterway associated with the lost area;*
   - The replication area has an unrestricted hydraulic connection to the Hoag Brook BVW. The IVW is not hydraulically connected to any water body or waterway, but will be connected to Hoag Brook;
5. *the replacement area shall be located within the same general area of the water body or reach of the waterway as the lost area;*
   - The replication area is in the same general area along Hoag Brook, and satisfies this criterion for the BVW. The IVW is not hydraulically connected to any water body or waterway;
6. *at least 75% of the surface of the replacement area shall be reestablished with indigenous wetland plant species within two growing seasons, and prior to said vegetative reestablishment any exposed soil in the replacement area shall be temporarily stabilized to prevent erosion in accordance with standard U.S. Soil Conservation Service methods;*
   - The details below provide for soils and planting consistent with this requirement;
7. *the replacement area shall be provided in a manner which is consistent with all other General Performance Standards for each resource area in Part III of 310 CMR 10.00.*
   - As detailed in the EcoTec performance Standards Analysis, the replication area and all project components satisfy the Performance Stands for all Resource Areas on the site.

The Bellingham Wetlands Bylaw Regulations contain similar provisions, with additional criteria, including the requirement that: "*The area of the wetland replication shall be at a 2:1 ratio to that area of wetland loss.*" As noted on the Replication Plan, an area of replication of 37,000 sf is proposed, in excess of the 2:1 mitigation ratio, including both the BVW fill (480 sf) and IVW fill (16,860 sf). The local regulations also include several provisions for which a waiver is sought, including replication area proximity to the proposed impact area and similarity of elevation and physical characteristics. As detailed in the EcoTec Performance Standards Analysis, it is our opinion that the proposed replication area significantly enhances the wetland function relative to the existing IVW area.

Details regarding construction, planting, and monitoring are proposed below. BVW replication requirements are summarized below.

Hydrology:
As indicated above and on the proposed replication area grading plan (Sheet "SUP-A" by GLM Engineering) the replication area has been designed to provide a range of hydrologic conditions. Information informing the proposed grading and anticipated hydrology includes the elevation of the adjacent BVW, and test pits within the proposed replication area. The replication area is located adjacent to the native BVW bordering Hoag Brook, which has a generally southerly flow. The replication area is approximately 300-feet long along measured parallel to the brook, and the elevation of the brook and wetland increases to the north (upstream). The BVW boundary at delineation flags along the length of the replication area is at the following approximate elevations:

Wetland Flag	Elev at Flag
• Flag E-39	224'
• Flag E-32	225'
• Flag E-27	226'
• Flag E-22	227'

Test pit data which includes detailed soil descriptions and estimated seasonal high water table ("ESHWT") depths/ elevations were also evaluated. The plan includes two test pits (TP 22-7 and TP 22-8) with surface elevation and depth to ESHWT. Based on the plan information, the ESHWT at test pits in the replication area is:

- TP22-7: 223.1
- TP22-8: 222.7.

The replication area is proposed to have a fringe of wooded swamp wetland hydrology, with most of the area at a hydrology in the range of shrub swamp to wet meadow, and a central area that is proposed to be seasonally inundated.

As noted below, it is proposed that at the time of the replication area construction, the excavation to sub-grade be completed to conform approximately to the grades indicated on the replication plan, but that final sub-grade elevation across the replication area be determined based on a field determination by a qualified wetland/ soil scientist of hydrologic indicators in the area, to achieve the proposed hydrology.

We note that the proposed invert of the box culvert is designed to match the existing culvert invert (221.5). The proposed culvert is designed in compliance with Stream Crossing Standards and therefore is much larger than the existing culvert orifice. It will therefore be less prone to clogging with plant matter. We considered the possible effect that this change might have on groundwater levels in the wetland immediately upstream of the culvert. The interior of the BVW upstream of the culvert for the first +/- 100-feet has deep organic soils, lacks woody vegetation, and appears to be subject to periodic ponding under existing conditions. This area exists at elevation 222 - 223 for the most part. Nearby test pits in the upland indicate ESHWT elevations of 222.7 and 223.1, at or above the surface elevation of the existing BVW. Due to the extensive area of sand and gravel soils around the site, and a large area of wooded swamp tributary to the wetland at the subject location, it appears that the BVW at that location receives groundwater flow from the surrounding upland, as well as stream flow from the wetland to the north, which flows well into the growing season. Based upon this assessment, we expect that the hydrology of the BVW will be maintained from these two sources of water, and the loss of the periodic clogging of the existing culvert pipe would not have a substantive effect on the hydrology of the BVW upgradient of the culvert.

BVW/ IVW Replication Protocol:

1. Prior to initiating work at the replication area, the boundary of the existing BVW will be protected with a properly entrenched silt fence and minimum 6-inch staked straw wattle between the wetland and the work area, including access ways.

2. Access to the proposed replication area will be from the existing gravel road which is proposed to be upgraded to serve as the main project roadway.

3. Existing trees and other woody vegetation within the proposed replication area will be removed. A portion of this woody material will be set aside and used to provide coarse woody debris in the replication area, as described below (step #8). A minimum of 20 logs of at least 8-feet in length will be saved for use as habitat enhancement in the replication area. Smaller woody debris will also be saved for this use.

4. The replication area will be excavated to subgrade (approximately 12-inches below final grade). As indicated on the Replication Plan sheet, the precise depth of the subgrade excavation will be determined in the field by a qualified soil/ wetland scientist based upon soil features observed in the excavation. Subgrade will be 1-foot below the proposed finish grade. Side slopes will be graded as indicated on the plans, no steeper than 3:1 (H:V) and allowing for 4- to 6-inches of topsoil placement. Excess soil will be removed from the replication area vicinity for use in other areas of the site or stockpiled outside of the wetland Buffer Zone.

5. During the replication area excavation and grading, large boulders encountered may be left in place as habitat features, and several rockpiles may be formed at multiple locations (not more than 10% of the area to be covered by boulders or rock piles).

6. Because the BVW fill area is much smaller than the proposed replication area, and the IVW areas have developed only a trace of topsoil, the opportunity for translocation of wetland topsoil is very limited. To the extent feasible, organically enriched topsoil will be removed from the BVW proposed to be filled and transported to a storage location near the replication area, where it will be mixed with a 1:1 mixture of high quality, loamy topsoil and leaf mold compost, as necessary, to provide for 12 inches in thickness throughout the replication area.

   Topsoil for wetland restoration shall be harvested from an upland area of the site (where wetland invasives are not anticipated) with well-composted leaf mold added to increase organic matter content. This combination should minimize the possible introduction of invasives to the replication area. The specifications for the mineral soil and compost separates are found below. The organic matter content of finished wetland restoration soil shall be between 12 and 20 percent. The textural class shall be Mucky Sandy Loam or Mucky Fine Sandy Loam. Typically a field mix of 50% rough-screened (1 inch-minus screen size), weed-free, loamy mineral soil and 50% compost results in an organic matter content within the suitable range.

   Sandy loam mineral soil properties:

Particle Class	% of Total Weight	Average %
Sand (0.05 - 2.0 mm dia. range)	45-75	60
Silt (0.002-0.05 mm dia. range)	15-35	25
Clay (less than 0.002 mm dia. range)	5-20	15
Gravel & Stone (>2.0 mm dia.)	<15%	

   Field assessment by a qualified soil scientist will be used to assess compliance with the above criteria.

   Compost- Compost shall be derived from leaf mould, clean ground wood, bark and/or sawdust that meets all State Environmental Agency requirements. The product shall be well composted, free of viable weed seeds and/or propagules and contain material of a generally humified nature capable of sustaining growth of vegetation, with no materials toxic to plant growth.

7. Following topsoil mix placement, the substrate will be roughly graded to provide an appropriate microtopography to mimic natural wetlands.

8. Wildlife enhancement measures including tree snags (logs installed to stand vertically), coarse woody debris, and rock piles will be installed within the replication area, to provide food, forage and cavity nesting opportunities. The rock piles will consist of multiple boulders/ cobbles each piled to extend above final grade to create crevices and cavities for shelter and nesting. The wetland scientist will oversee this process.

I TOWN CLERK OF THE TOWN OF BELLINGHAM RECEIVED AND RECORDED FROM THE PLANNING BOARD APPROVAL OF THIS PLAN AND NO APPEAL HAS BEEN TAKEN FOR TWENTY DAYS NEXT AFTER RECEIPT AND RECORDING OF SAME.

TOWN CLERK _____ DATE _____

APPROVED BY THE BELLINGHAM PLANNING BOARD:

_____

_____

_____

_____

_____

DATE APPROVED: _____

9. Planting of the replication area will be conducted, as summarized in Table 1, below:
   a. Planting will be done only during the beginning (April 15 through June) or end (September 1 to November 15) of the growing season. Alternatively, planting in the mid-growing season is only acceptable if irrigation is provided;
   b. The plant species identified in the table below will be planted in the replication area from nursery stock;
   c. No planting is proposed in the central depression;
   d. The wetland seed mix is proposed throughout the replication area (excluding the central depression);
   e. The red maple saplings will be planted only at the periphery of the replication area;
   f. The shrubs will be planted randomly throughout the flatter portions of the replication area, not planted in rows;
   g. Woody vegetation planting will be conducted first, followed by herbaceous seeding;

Table 1: Planting Plan for Wetland Replication Area
SPECIES; SIZE; SPACINGNUMBER1Saplings; min 6 to 8' height, container or balled, burlapped; Planted around perimeter Red Maple (*Acer rubrum*)20Shrubs; 2.5 to 3' in height, min 1 gal container; Planted in the interior of the replication area, excluding the central depression 200 total1 Highbush blueberry (*Vaccinium corymbosum*) Arrow-*wood (Viburnum recognitum*) Sweet pepperbush (*Clethra alnifolia*) Nannyberry *(Viburnum lentago*) Winterberry (*Ilex verticillata*) Silky dogwood (*Cornus amomum)*Herbaceous; Seed: New England Wetland Plants, New England Wetmix (or approved substitute) Plugs: A mixture of plugs of native wetland pollinators shall be planted in the replication area near the boundary of the proposed seasonal ponding area Cardinal flower *(Lobelia cardinalis)* Northern blueflag *(Iris versicolor)* Water Plantain (*Alisma subcordatum*) Swamp Milkweed *(Asclepias incarnata*) Marsh Marigold *(Caltha palustris)* Lurid Sedge (*Carex lurida*) Boneset *(Eupatorium perfoliatum*) Spotted Joe-Pye Weed (*Eutrochium maculatum*) Soft-Stem Bulrush (*Schoenoplectus tabernaemontani*) Swamp Aster *(Aster puniceum*) NOTE: The proposed herbaceous plug plantings may be especially susceptible to wildlife herbivory, and therefore, the success of these plantings cannot be ensured. It is anticipated that by planting a variety of species, some will thrive in the long erm, but it is not feasible to predict with any certainty. 10 lb. 200 total1 1 Depending upon availability from local nursery stock, at least four (4) of the listed species will be selected, with at least twenty (20) specimens of each selected species planted, for a total of 200 shrubs.

10. The coarse woody debris salvaged during the initial clearing shall be replaced within the replication area to mimic a natural forested wetland surface. This may include short vertical snags. A minimum of 200 linear feet of 2-inch diameter or larger logs and branches will be placed haphazardly throughout the replication area. Any stones encountered during the replication area excavation may also be allowed to remain.

11. An erosion control barrier of silt fence or straw wattle will be placed around the outer edge of the replication area, at the toe of the side slopes;

12. A minimum of 4- to 6-inches of topsoil will be spread throughout the side slopes and any other areas disturbed for construction of the replication area;

13. The side slopes and access path will be planted with a native upland seed mix (e.g. New England Wetland Plants Restoration Mix for Wet Sites) designed to provide permanent cover. After seeding, the side-slopes may be mulched with a thin layer of straw to provide for temporary erosion control.

14. After the wetland replication area and side slopes have become vegetatively stabilized and following approval of the issuing authority, the perimeter siltation fence and all wooden stakes will be removed and disposed of properly.

The replication areas will be inspected, by a qualified Wetland Scientist, at the end of each growing season for a minimum of two years or until such time as the required 75% of vegetative cover with wetland species has been established. Monitoring will include vegetative species and cover assessment, soil evaluation and observation of groundwater/soil saturation. If invasive species are noted (e.g., knotweed, phragmites, etc.) these species will be removed by either hand-pulling the entire plant out by the roots or by cutting the above-ground portion and applying glyphosate herbicide to the stem with a drip applicator. The cut or pulled plants will be properly disposed of outside the wetlands and buffer zones and care will be taken not to distribute any seeds or berries that may be present

CONSTRUCTION SPECIFICATIONS

REVISIONS

No.	DATE	DESCRIPTION
1	04/02/2024	WETLAND DELINEATION
2	07/15/2024	PLG BRD ENG COMMENTS
3	09/26/2024	NEW ROAD LAYOUT (LAKE ST)
4	01/30/2025	PLG BRD COMMENTS/129 UNITS
5	01/30/2025	PLG BRD COMMENTS - BSC 3/19/25
6	04/28/2025	PLG BRD COMMENTS

SITE DEVELOPMENT PLAN
"PROSPECT HILL VILLAGE"
A MULTI-UNIT RESIDENTIAL DEVELOPMENT
BELLINGHAM, MASSACHUSETTS

PREPARED FOR:
WALL STREET DEVELOPMENT CORP.
P.O. BOX 272
WESTWOOD, MASSACHUSETTS

GLM Engineering Consultants, Inc.
19 EXCHANGE STREET
HOLLISTON, MA 01746
P: 508-429-1100
F: 508-429-7160
www.GLMengineering.com

JOB No. 16,590
DATE: November 30, 2023
SCALE: 1"= 20'
SHEET: SUP-D
PLAN #: 27,871

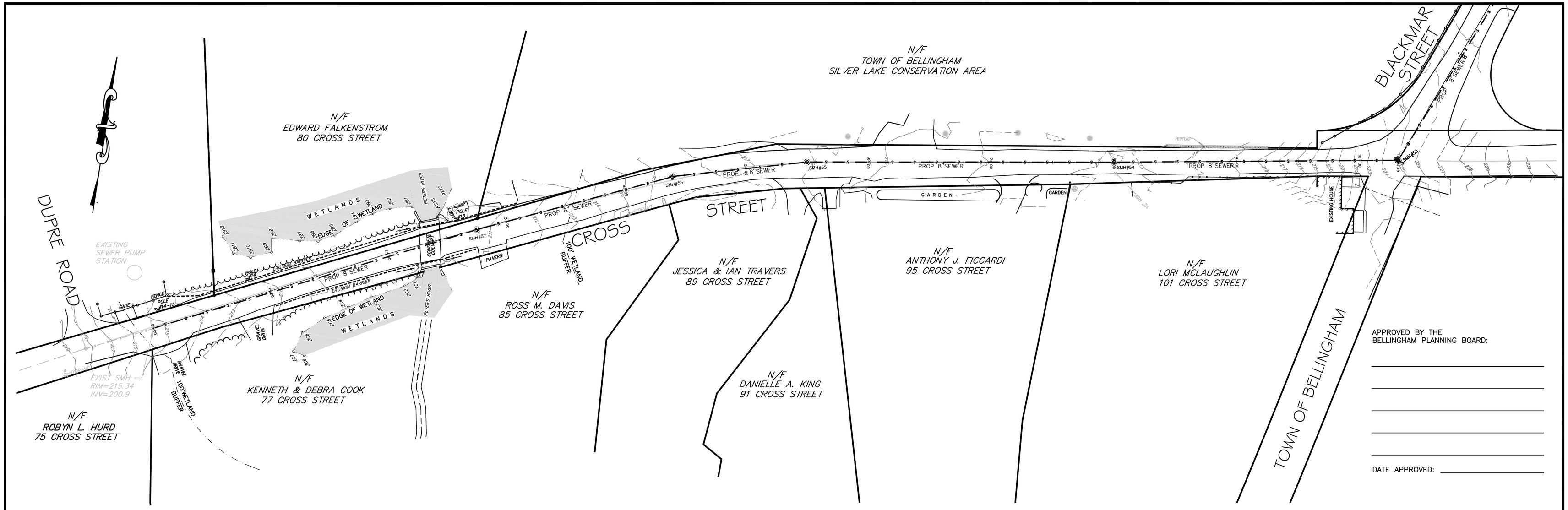

APPROVED BY THE
BELLINGHAM PLANNING BOARD:

DATE APPROVED:

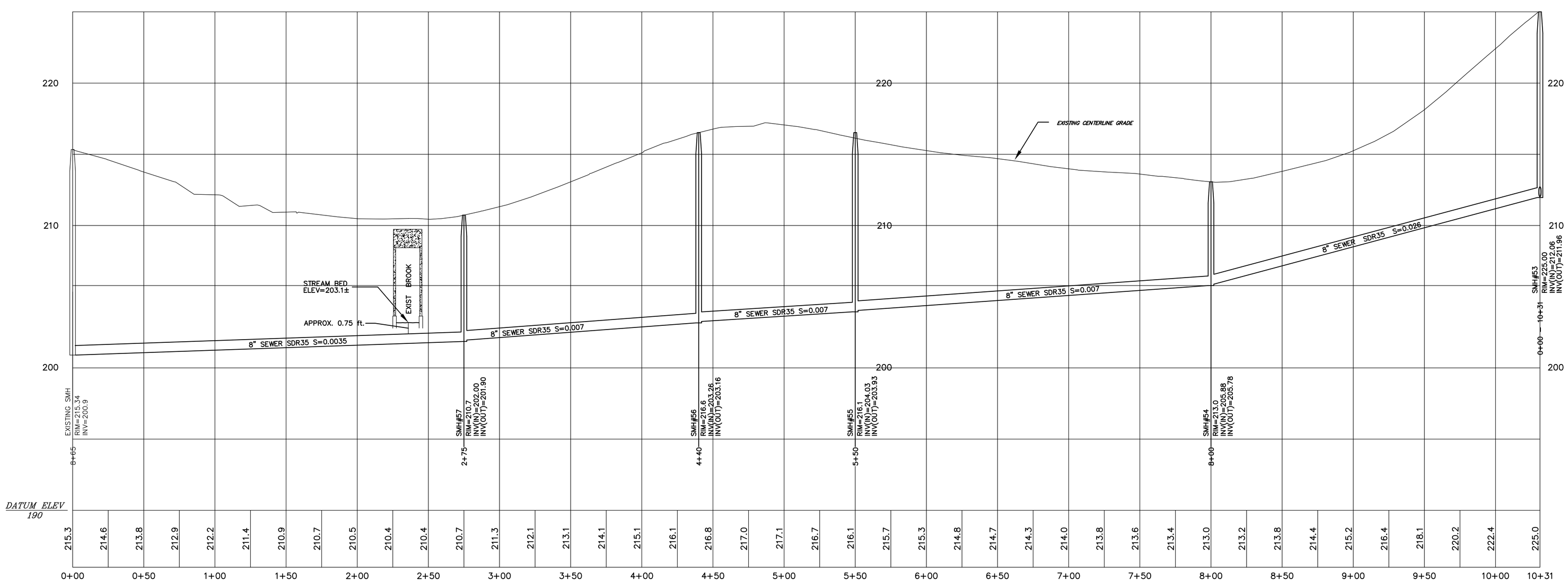

SCALE: Horiz: 1"=40'; Vert: 1"=4'

LEGEND

- EXISTING UTILITY POLE
- PROPOSED HYDRANT
- EXISTING WATER LINE
- EXISTING CONTOUR LINE
- PROPOSED CONTOUR LINE
- PROPOSED CATCH BASIN
- PROPOSED DRAIN MANHOLE
- PROPOSED DRAIN LINE
- PROPOSED SEWER MANHOLE
- PROPOSED SEWER LINE
- PROPOSED CAPE COD BERM
- WETLAND DELINEATION FLAG
- DEEP HOLE TEST PIT

PLAN & PROFILE CROSS STREET SEWER EXTENSION PLAN

REVISIONS

No.	DATE	DESCRIPTION
1	01/30/2025	PLG BRD COMMENTS/129 UNITS
2	04/09/2025	PLG BRD COMMENTS - BSC 3/19/25
3	04/28/2025	PLG BRD COMMENTS

SITE DEVELOPMENT PLAN "PROSPECT HILL VILLAGE" A MULTI-UNIT RESIDENTIAL DEVELOPMENT BELLINGHAM, MASSACHUSETTS

PREPARED FOR:
WALL STREET DEVELOPMENT CORP.
P.O. BOX 272
WESTWOOD, MASSACHUSETTS

GLM Engineering Consultants, Inc.
19 EXCHANGE STREET
HOLLISTON, MA 01746
P: 508-429-1100
F: 508-429-7160
www.GLMengineering.com

JOB No.	16,590
DATE:	AUG. 12, 2024
SCALE:	1"= 40'
SHEET:	S1 OF 4
PLAN #:	27,871

LEGEND

- EXISTING UTILITY POLE
- PROPOSED HYDRANT
- EXISTING WATER LINE
- EXISTING CONTOUR LINE
- PROPOSED CONTOUR LINE
- PROPOSED CATCH BASIN
- PROPOSED DRAIN MANHOLE
- PROPOSED DRAIN LINE
- PROPOSED SEWER MANHOLE
- PROPOSED SEWER LINE
- PROPOSED CAPE COD BERM
- WETLAND DELINEATION FLAG
- DEEP HOLE TEST PIT

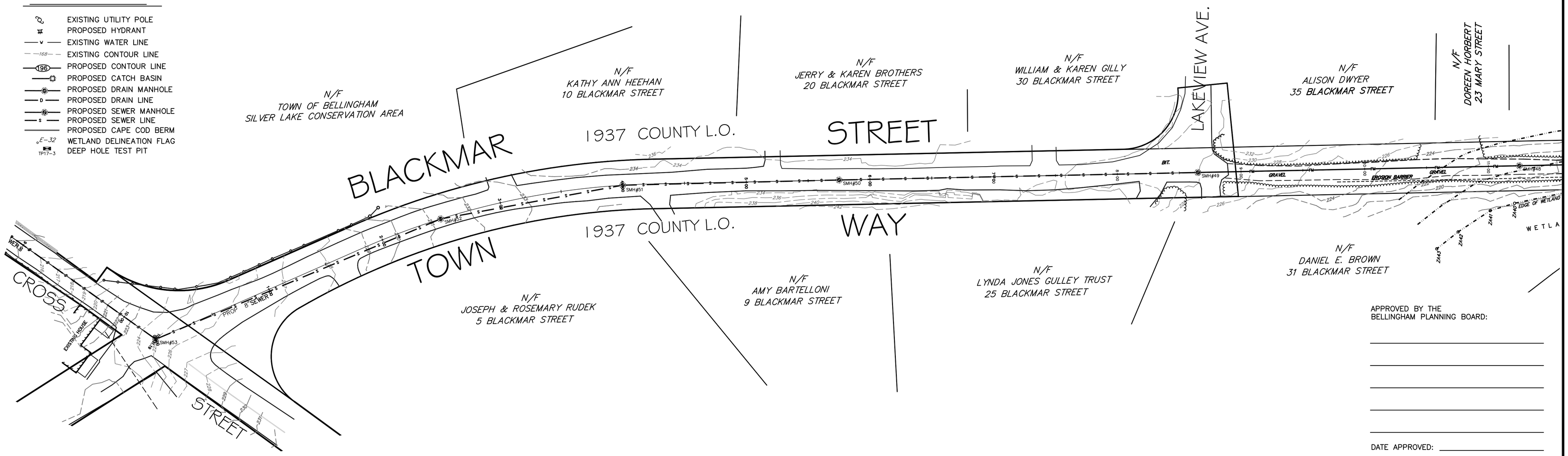

APPROVED BY THE
BELLINGHAM PLANNING BOARD:

DATE APPROVED:

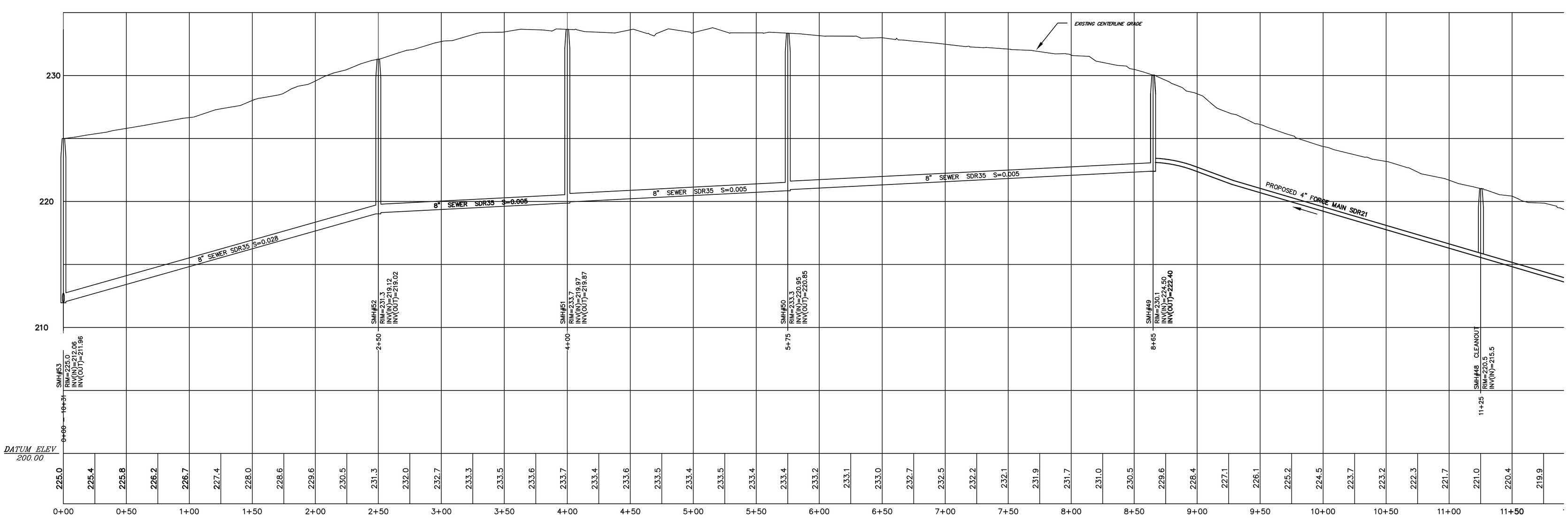

SCALE: Horiz: 1"=40'; Vert: 1"=4'

PLAN & PROFILE BLACKMAR ST.
SEWER EXTENSION PLAN

REVISIONS

No.	DATE	DESCRIPTION
1	01/30/2025	PLG BRD COMMENTS/129 UNITS
2	04/09/2025	PLG BRD COMMENTS - BSC 3/19/25
3	04/28/2025	PLG BRD COMMENTS

SEWER EXTENSION PLAN
"PROSPECT HILL VILLAGE"
A MULTI-UNIT RESIDENTIAL DEVELOPMENT
BELLINGHAM, MASSACHUSETTS

PREPARED FOR:
WALL STREET DEVELOPMENT CORP.
P.O. BOX 272
WESTWOOD, MASSACHUSETTS

GLM Engineering Consultants, Inc.
19 EXCHANGE STREET
HOLLISTON, MA 01746
P: 508-429-1100
F: 508-429-7160
www.GLMengineering.com

JOB No.	16,590
DATE:	AUG. 12, 2024
SCALE:	1"= 40'
SHEET:	S2 OF 4
PLAN #:	27,871

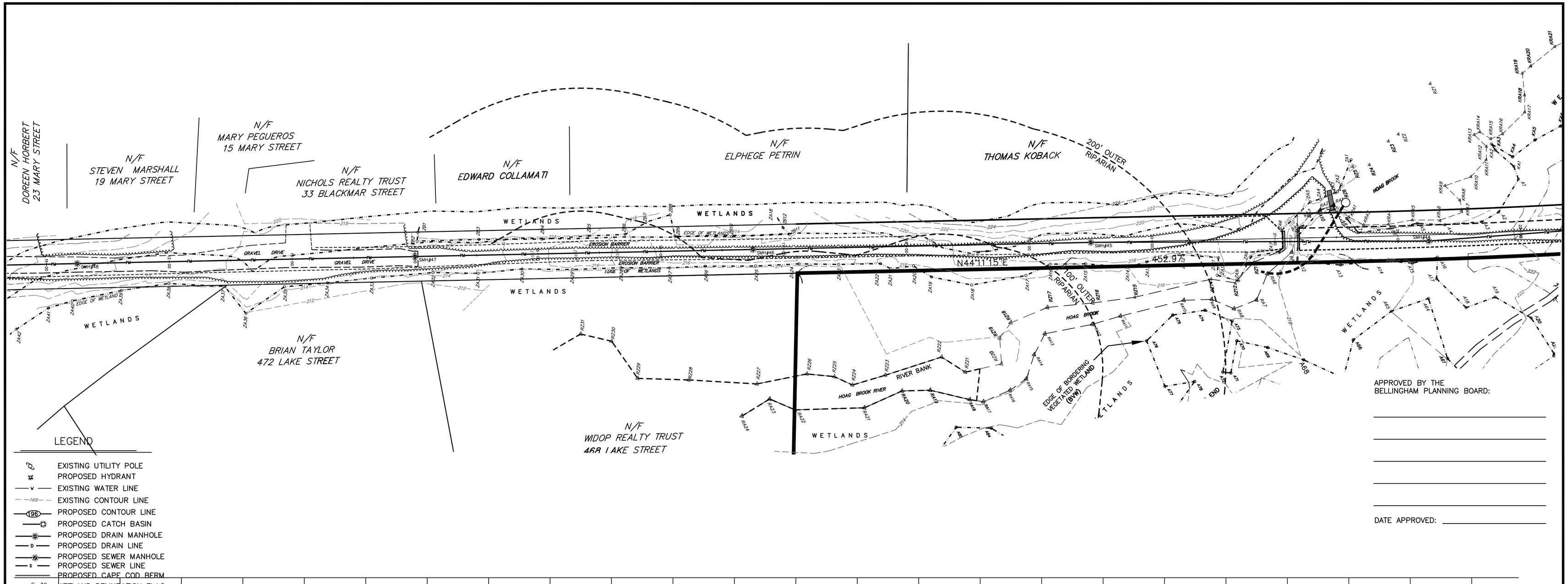

APPROVED BY THE
BELLINGHAM PLANNING BOARD:

DATE APPROVED:

LEGEND

- EXISTING UTILITY POLE
- PROPOSED HYDRANT
- EXISTING WATER LINE
- EXISTING CONTOUR LINE
- PROPOSED CONTOUR LINE
- PROPOSED CATCH BASIN
- PROPOSED DRAIN MANHOLE
- PROPOSED DRAIN LINE
- PROPOSED SEWER MANHOLE
- PROPOSED SEWER LINE
- PROPOSED CAPE COD BERM
- WETLAND DELINEATION FLAG
- DEEP HOLE TEST PIT

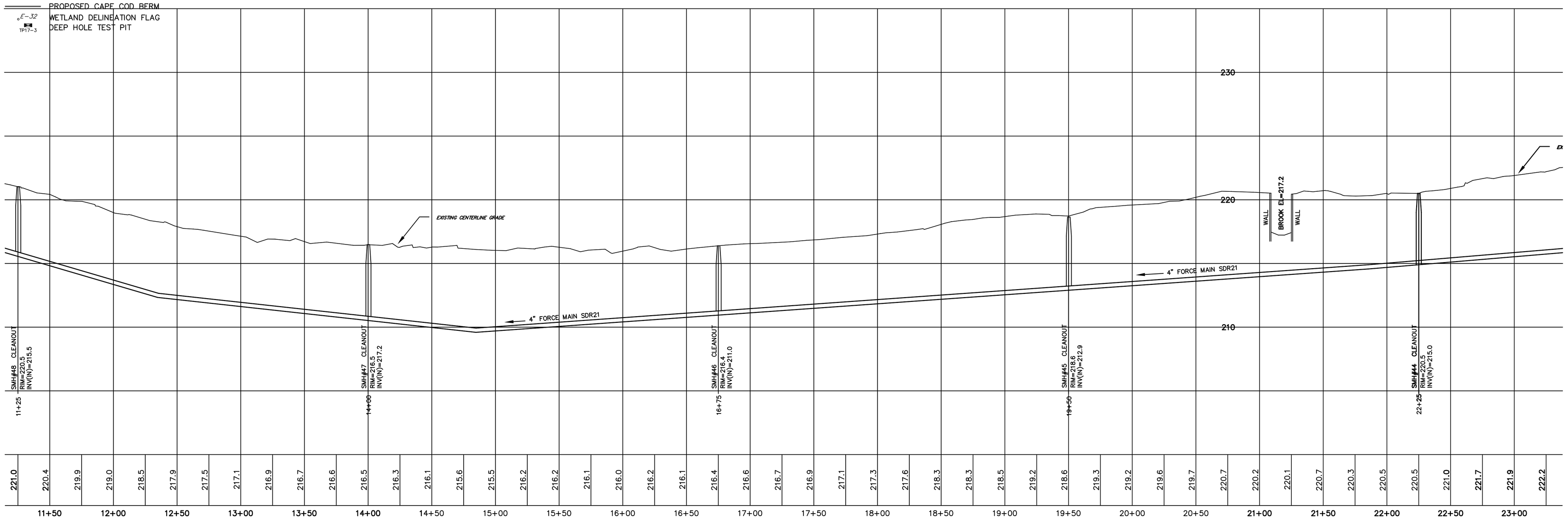

SCALE: Horiz: 1"=40'; Vert: 1"=4'

PLAN & PROFILE BLACKMAR ST.
SEWER EXTENSION PLAN

REVISIONS

No.	DATE	DESCRIPTION
1	01/30/2025	PLG BRD COMMENTS/129 UNITS
2	04/09/2025	PLG BRD COMMENTS - BSC 3/19/25
3	04/28/2025	PLG BRD COMMENTS

SEWER EXTENSION PLAN
"PROSPECT HILL VILLAGE"
A MULTI-UNIT RESIDENTIAL DEVELOPMENT
BELLINGHAM, MASSACHUSETTS

PREPARED FOR:
WALL STREET DEVELOPMENT CORP.
P.O. BOX 272
WESTWOOD, MASSACHUSETTS

GLM Engineering Consultants, Inc.
19 EXCHANGE STREET
HOLLISTON, MA 01746
P: 508-429-1100
F: 508-429-7160
www.GLMengineering.com

JOB No.	16,590
DATE:	AUG. 12, 2024
SCALE:	1"= 40'
SHEET:	S3 OF 4
PLAN #:	27,871

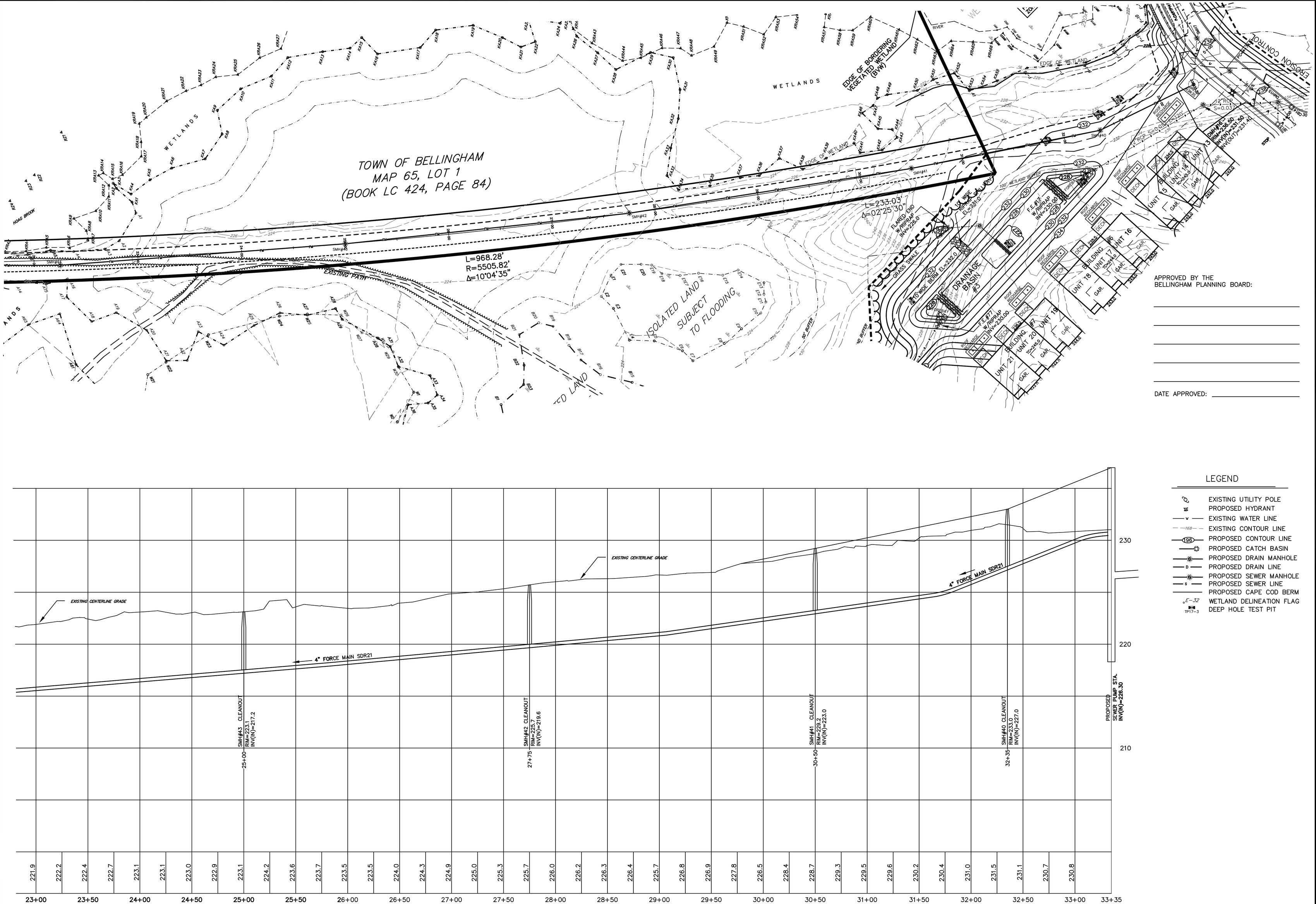

LEGEND

- EXISTING UTILITY POLE
- PROPOSED HYDRANT
- EXISTING WATER LINE
- EXISTING CONTOUR LINE
- PROPOSED CONTOUR LINE
- PROPOSED CATCH BASIN
- PROPOSED DRAIN MANHOLE
- PROPOSED DRAIN LINE
- PROPOSED SEWER MANHOLE
- PROPOSED SEWER LINE
- PROPOSED CAPE COD BERM
- WETLAND DELINEATION FLAG
- DEEP HOLE TEST PIT

PLAN & PROFILE
SEWER EXTENSION PLAN

REVISIONS

No.	DATE	DESCRIPTION
1	01/30/2025	PLG BRD COMMENTS/129 UNITS
2	04/09/2025	PLG BRD COMMENTS - BSC 3/19/25
3	04/28/2025	PLG BRD COMMENTS

SEWER EXTENSION PLAN
"PROSPECT HILL VILLAGE"
A MULTI-UNIT RESIDENTIAL DEVELOPMENT
BELLINGHAM, MASSACHUSETTS

PREPARED FOR:
WALL STREET DEVELOPMENT CORP.
P.O. BOX 272
WESTWOOD, MASSACHUSETTS

GLM Engineering Consultants, Inc.
19 EXCHANGE STREET
HOLLISTON, MA 01746
P: 508-429-1100
F: 508-429-7160
www.GLMengineering.com

JOB No.	16,590
DATE:	AUG. 12, 2024
SCALE:	1"= 40'
SHEET:	S4 OF 4
PLAN #:	27,871